 Copyright© 2006 Cooper Crouse-Hinds

6F Junction Boxes

Application and Selection

Application:

Junction boxes, designed for hazardous and non-hazardous locations, are used in a variety of industries to perform the following functions:

- as a pull box
- to provide enclosures for splices and taps
- as a mounting box for multi-device control stations
- for housing apparatus, instruments, and other devices

Considerations for Selection:

- Environmental location – the physical location of the junction box will call for proper construction of the box to meet National Electrical Code requirements and will affect the material and finish needed to meet weather and corrosive conditions, if present.
- Number and size of conductors – combined with the function to be performed (i.e., splicing, pull box), determines the amount of space needed, and therefore, the required physical dimensions of the box.
- Conduit layout – determines the number, size, and location of the conduit openings in the box. It will also determine the type of mounting required (i.e., flush or surface positioning of the box).
- Flexibility required – if changes in the electrical system are anticipated, the box chosen should be easily adaptable, either by construction (i.e., detachable hub plates) or size to the future system.

Options and Accessories:

A wide variety of options and accessories for special application are available for the various junction box families. These can be selected once the type of junction box has been determined. These options are shown on the individual pages. Some of the options available include:

- Special covers
- Hinged covers
- Materials and finishes
- Equipment mounting plates
- Openings for control station and other device mounting
- *Corro-free*™ epoxy powder coat – information available on request

Quick Selector Chart

Junction Boxes	NEC/CEC Hazardous Area Compliance	Environmental Capability/Type Designation	Size Range† L, W, D Inside	Max. Conduit Opening Size	Mtg.	Type of Conduit Opening	Cover Type	Page No.
WAB		Raintight/Type 3, Dust-tight/Type 12	4 x 4 x 2 to 24 x 24 x 8	5	Surface	Drilled and tapped, slip holes	Unflanged	113
WCB		Raintight/Type 3, Watertight/Type 4, Dust-tight/Type 12	4 x 4 x 2 to 24 x 24 x 8	5	Surface	Drilled and tapped, slip holes	Overlapping	114
WJB		Raintight/Type 3, Watertight/Type 4	4 x 4 x 3 to 36 x 24 x 24	6	Surface	Drilled and tapped, slip holes	Flanged	115
WJBF		Raintight/Type 3, Watertight/Type 4	4 x 4 x 4 to 36 x 24 x 24	6	Flush	Drilled and tapped, slip holes	External flanged recessed sidewalk	116
WEB		Raintight/Type 3	4 x 4 x 3 to 36 x 36 x 12	6	Flush	Drilled and tapped, slip holes	Internal Flanged	117
RS, RSM, RSS		Raintight/Type 3	4½ x 4½ x 4 to 8½ x 8½ x 4	3	Surface	Detachable hub plates	Flanged	121
GU, GUE, GUB	Cl. I, Div. 1 & 2, Groups B, C, D; Cl. II, Div. 1, Groups E, F, G; Cl. II, Div. 2, Groups F, G; Cl. III	Raintight/Type 3 Watertight/Type 4‡ Hazardous/Types 7,9	4 5/16 x 4 5/16 x 4⅛ to 17 x 16⅜ x 17⅜	4	Surface	Drilled and tapped	Threaded, glass window and domed covers available	122
EJB	Cl. I, Div. 1 & 2, Groups B, C, D; Cl. II, Div. 1, Groups E, F, G; Cl. II, Div. 2, Groups F, G; Cl. III	Raintight/Type 3 Watertight/Type 4 (Style C only) Hazardous/Types 7,9	6 x 4 x 4 to 60 x 22 x 12*	6	Surface	Drilled and tapped	Ground joint	136
GUA	Cl. I, Div. 1 & 2, Groups C, D; Cl. II, Div. 1, Groups E, F, G; Cl. II, Div. 2, Groups F, G; Cl. III	Raintight/Type 3 Watertight/Type 4 Hazardous/Types 7,9	3⅜ x 3⅜ x 1⅞	1	Surface	Union hubs	Threaded	137
GUP	Cl. I, Div. 1 & 2, Groups C, D; Cl. II, Div. 1, Groups E, F, G; Cl. II, Div. 2, Groups F, G; Cl. III	Raintight/Type 3 Watertight/Type 4 Hazardous/Types 7,9	3⅝ x 3⅝ x 2¼	1	Surface	Drilled and tapped cast hubs	Threaded	138
EGJ	Cl. I, Div. 1 & 2, Groups D; Cl. II, Div. 1, Groups E, F, G; Cl. II, Div. 2, Groups F, G; Cl. III	Raintight/Type 3 Hazardous/Types 7,9	5½ x 5½ x 4 to 6¾ x 6¾ x 5	1	Flush	Drilled and tapped	Threaded	139

† Length and width are inside dimensions. Depth is inside dimension without cover.

‡ All except GUB01110 and GUB15151.

* EJB602212 is suitable for Class I, Div. 1, Groups C and D.

US: 1-866-764-5454 CAN: 1-800-265-0502 Copyright© 2006 Cooper Crouse-Hinds

WAB Junction Boxes

Heavy Duty
Unflanged for Surface Mounting
Ordering Info. Pages 118 to 120
Dimensions Pages 119 and 120

Dust-proof
Weatherproof
Raintight
NEMA 3

Application:

Where a heavy duty dustproof or weatherproof enclosure is desired, WAB boxes are installed in conduit system to:
- act as pull box for conductors
- provide openings and space for making splices and taps in conductors
- provide for branch conduit runs
- provide access to conductors for maintenance and future system changes
- enclose and protect electrical devices

Features:

- Covers are suitable for vehicular traffic (H-20 loading)
- Flat neoprene gasket cemented to the cover.
- Wide range of drilled and tapped and slip hole conduit entrance sizes and locations permits extreme flexibility of use in conduit system.
- Internal equipment mounting pads available blind tapped for ¼″ – 20 mounting screws.
- Blind tapped into internal mounting pads.
- Mounting straps are standard on all boxes.

Standard Materials:

- *Feraloy*® iron alloy body
- Heavy-gauge steel cover
- Neoprene gaskets
- Stainless steel cover screws
- Steel mounting straps

Standard Finishes:

- *Feraloy* iron alloy and heavy gauge steel – hot dip galvanized

Options:

- Factory installed mounting plate... add suffix –MP.
- See Ordering Information, beginning pg. 118 for:
  - Drilled and tapped conduit holes
  - Slip holes

Size Ranges:

- 4″ x 4″ x 2″ to 24″ x 24″ x 8″

Certifications and Compliances:

- UL Standard: 50
- Dust-proof
- Weatherproof
- H-20 Vehicle Load Rating

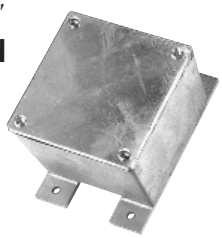

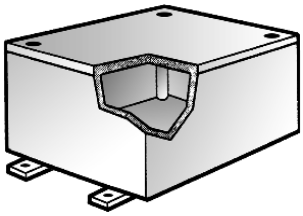

Flat Covers

Cat. #	Wall Thickness (in.)	Length (in.)	Width (in.)	Depth (in.)	Lightning Service
WAB040402	5/32	4	4	2	✓
WAB040403	3/16	4	4	3	✓
WAB040404	¼	4	4	4	✓
WAB050503	¼	5	5	3	✓
WAB050504	¼	5	5	4	✓
WAB060403	¼	6	4	3	✓
WAB060404	7/32	6	4	4	✓
WAB060603	¼	6	6	3	✓
WAB060604	3/16	6	6	4	✓
WAB060606	9/32	6	6	6	✓
WAB080403	5/16	8	4	3	
WAB080604	7/32	8	6	4	✓
WAB080606	5/16	8	6	6	✓
WAB080804	5/16	8	8	4	✓
WAB080806	5/16	8	8	6	✓
WAB080808	5/16	8	8	8	✓
WAB090604	5/16	9	6	4	
WAB100604	¼	10	6	4	
WAB100804	¼	10	8	4	✓
WAB100806	9/32	10	8	6	✓
WAB101006	¼	10	10	6	✓
WAB120604	9/32	12	6	4	✓
WAB120606	9/32	12	6	6	✓
WAB120806	9/32	12	8	6	✓
WAB120808	⅜	12	8	8	
WAB121204	9/32	12	12	4	✓
WAB121206	9/32	12	12	6	✓
WAB121208	9/32	12	12	8	✓
WAB160606	¼	16	6	6	
WAB161208	5/16	16	12	8	✓
WAB181206	5/16	18	12	6	✓
WAB181208	5/16	18	12	8	
WAB181210	⅜	18	12	10	
WAB181806	⅜	18	18	6	✓
WAB181812	7/16	18	18	12	✓
WAB241212	7/16	24	12	12	
WAB242408	11/32	24	24	8	

NOTE: For conduit liner ordering information, see page 140.

✓ – available with Lightning Service™
See Section G for complete details

 Copyright© 2006 Cooper Crouse-Hinds

WCB Junction Boxes

Heavy Duty
Overlapping Cover for Surface Mounting

Ordering Info. Pages 118 to 120
Dimensions Pages 119 and 120

Dust-tight
Weatherproof
Raintight
Watertight
NEMA 3,4

Application:

Where a heavy duty dust-tight, weatherproof, raintight, or watertight enclosure is desired, WCB boxes are installed in conduit systems to:

- act as pull box for conductors
- provide openings and space for making splices and taps in conductors
- provide for branch conduit runs
- provide access to conductors for maintenance and future system changes
- enclose and protect electrical devices

Features:

- Flat neoprene gasket cemented to cover.
- Overlapping cover sheds environment.
- Wide range of drilled and tapped and slip hole conduit entrance sizes and locations permits maximum flexibility of use in conduit system.
- Internal equipment mounting pads available blind tapped for ¼″ – 20 mounting screws.
- Blind tapped into internal mounting pads.
- Mounting straps are standard on all boxes.

Standard Materials:

- *Feraloy*® iron alloy cover and body
- Neoprene gaskets
- Stainless steel cover screws
- Steel mounting straps

Standard Finishes:

- *Feraloy* iron alloy – hot dip galvanized

Options:

- Factory installed mounting plate... add suffix -MP.
- See Ordering Information, beginning pg. 118, for:
  Drilled and tapped conduit holes
  Slip holes

Size Ranges:

- 4″ x 4″ x 2″ to 24″ x 24″ x 8″

Certifications and Compliances:

- UL Standard: 50
- Dust-tight
- Weatherproof
- Raintight
- Watertight

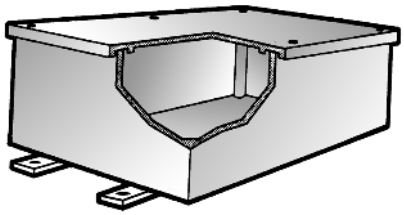

Ordering Information

Cat. #	Wall Thickness (in.)	Length (in.)	Width (in.)	Depth (in.)	Lightning Service
WCB040402	5/32	4	4	2	
WCB040403	3/16	4	4	3	✓
WCB040404	1/4	4	4	4	✓
WCB050503	1/4	5	5	3	✓
WCB050504	1/4	5	5	4	✓
WCB060403	1/4	6	4	3	✓
WCB060404	7/32	6	4	4	✓
WCB060603	1/4	6	6	3	✓
WCB060604	3/16	6	6	4	✓
WCB060606	9/32	6	6	6	✓
WCB080403	5/16	8	4	3	
WCB080604	7/32	8	6	4	✓
WCB080606	5/16	8	6	6	✓
WCB080804	5/16	8	8	4	✓
WCB080806	5/16	8	8	6	✓
WCB080808	5/16	8	8	8	✓
WCB090604	5/16	9	6	4	✓
WCB100604	1/4	10	6	4	
WCB100804	1/4	10	8	4	✓
WCB100806	9/32	10	8	6	✓
WCB101006	1/4	10	10	6	✓
WCB120604	9/32	12	6	4	✓
WCB120606	9/32	12	6	6	✓
WCB120806	9/32	12	8	6	✓
WCB120808	3/8	12	8	8	
WCB121204	9/32	12	12	4	✓
WCB121206	9/32	12	12	6	✓
WCB121208	9/32	12	12	8	✓
WCB160606	1/4	16	6	6	
WCB161208	5/16	16	12	8	✓
WCB181206	5/16	18	12	6	✓
WCB181208	5/16	18	12	8	
WCB181210	3/8	18	12	10	
WCB181806	3/8	18	18	6	✓
WCB181812	7/16	18	18	12	✓
WCB241212	7/16	24	12	12	
WCB242408	11/32	24	24	8	✓

NOTE: For conduit liner ordering information, see page 140.

✓ – available with Lightning Service™
See Section G for complete details

US: 1-866-764-5454 CAN: 1-800-265-0502 Copyright© 2006 Cooper Crouse-Hinds

WJB Junction Boxes

Heavy Duty
Flanged for Surface Mounting
Ordering Info Pages 118 to 120
Dimensions Pages 119 and 120

Weatherproof
Watertight
Raintight
NEMA 3,4

Application:

WJB boxes are standard with mounting straps and are primarily designed for surface mounting. WJB heavy duty junction boxes are installed in conduit systems to:

- act as pull box for conductors
- provide openings and space for making splices and taps in conductors
- provide for branch conduit runs
- provide access to conductors for maintenance and future system changes
- enclose and protect electrical equipment

Features:

- Covers are suitable for vehicular traffic (H-20 loading)
- Neoprene gasket cemented to cover.
- Wide range of drilled and tapped conduit entrance sizes and locations permits extreme flexibility of use in conduit system.
- Internal equipment mounting pads may be drilled and tapped for ¼″ – 20 mounting screws.
- Blind tapped into internal mounting pads.

Standard Materials:

- *Feraloy*® iron alloy body
- Heavy-gauge steel – cover and mounting straps
- Neoprene gaskets

Standard Finishes:

- *Feraloy* iron alloy and heavy-gauge steel – hot-dip galvanized

Options:

- Factory installed mounting plate... add suffix -MP.
- See Ordering Information, beginning pg. 118 for:
  - Drilled and tapped conduit holes
  - Slip holes

Size Ranges:

- 4″ x 4″ x 3″ to 36″ x 24″ x 24″

Certifications and Compliances:

- UL Standard: 50
- CSA Standard C22.2
- Weatherproof
- Watertight
- CEC: Class II, E,F,G
  Class III
  Encl. 3-4
- H-20 Vehicle Load Rating

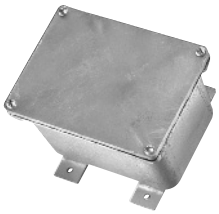

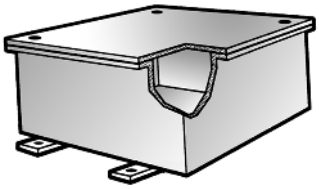

Ordering Information

Cat. #	Wall Thickness (in.)	Length (in.)	Width (in.)	Depth (in.)	Lightning Service
WJB040403	¼	4	4	3	
WJB040404	¼	4	4	4	✓
WJB060404	¼	6	4	4	
WJB060604	¼	6	6	4	✓
WJB060606	¼	6	6	6	✓
WJB080604	¼	8	6	4	
WJB080606	¼	8	6	6	✓
WJB080804	¼	8	8	4	✓
WJB080806	¼	8	8	6	
WJB080808	¼	8	8	8	
WJB100806	¼	10	8	6	
WJB100808	¼	10	8	8	
WJB101006	¼	10	10	6	✓
WJB101008	¼	10	10	8	
WJB120606	¼	12	6	6	
WJB120806	¼	12	8	6	
WJB120808	¼	12	8	8	
WJB120810	¼	12	8	10	
WJB121206	5⁄16	12	12	6	✓
WJB121208	5⁄16	12	12	8	✓
WJB121212	5⁄16	12	12	12	
WJB121218	5⁄16	12	12	18	
WJB140806	5⁄16	14	8	6	
WJB141410	5⁄16	14	14	10	
WJB161206	5⁄16	16	12	6	
WJB161208	5⁄16	16	12	8	
WJB161606	5⁄16	16	16	6	
WJB180806	5⁄16	18	8	6	
WJB180808	5⁄16	18	8	8	
WJB181006	5⁄16	18	10	6	
WJB181206	5⁄16	18	12	6	
WJB181208	5⁄16	18	12	8	✓
WJB181210	5⁄16	18	12	10	
WJB181212	5⁄16	18	12	12	
WJB181218	⅜	18	12	18	
WJB181806	⅜	18	18	6	
WJB181808	⅜	18	18	8	
WJB181812	⅜	18	18	12	
WJB181818	⅜	18	18	18	
WJB241208	⅜	24	12	8	
WJB241212	⅜	24	12	12	
WJB241808	⅜	24	18	8	
WJB241810	⅜	24	18	10	
WJB241812	⅜	24	18	12	
WJB241818	9⁄16	24	18	18	
WJB242412	9⁄16	24	24	12	
WJB242418	9⁄16	24	24	18	
WJB242424	9⁄16	24	24	24	
WJB302412	9⁄16	30	24	12	
WJB302418	9⁄16	30	24	18	
WJB362418	9⁄16	36	24	18	
WJB362424	9⁄16	36	24	24	

NOTE: For conduit liner ordering information, see page 140.

✓ – available with Lightning Service™
See Section G for complete details

 Copyright© 2006 Cooper Crouse-Hinds

WJBF Checkered Cover Sidewalk Junction Boxes

Heavy Duty
External Flanged for Flush Mounting

Ordering Information Pages 118 to 120
Dimensions Pages 119 and 120
Weatherproof
Watertight
Raintight
NEMA 3,4

Application:

WJBF boxes are standard with mounting feet and have a recessed flat checkered sidewalk cover for mounting in walls or floors. They may be ordered less mounting feet. WJBF heavy duty junction boxes are installed in conduit systems to:

- act as pull box for conductors
- provide openings and space for making splices and taps in conductors
- provide for branch conduit runs
- provide access to conductor for maintenance and future system changes
- enclose and protect electrical equipment

Features:

- Covers are suitable for vehicular traffic (H-20 loading)
- Neoprene gasket cemented to cover
- Wide range of drilled and tapped conduit entrance sizes and locations permits extreme flexibility of use in conduit system
- Internal equipment mounting pads may be drilled and tapped for ¼″ – 20 mounting screws
- Blind tapped into internal mounting pads

Standard Materials:

- *Feraloy*® iron alloy – body
- Heavy-gauge steel (checkered) – cover, mounting straps
- Neoprene gaskets

Standard Finishes:

- Feraloy iron alloy and heavy-gauge steel – hot dip galvanized

Options:

- Factory installed mounting plate... add suffix -MP.
- See Ordering Information, beginning pg. 118, for:
  - Drilled and tapped conduit holes
  - Slip holes

Size Ranges:

- 4″ x 4″ x 4″ to 36″ x 24″ x 24″

Certifications and Compliances:

- UL Standard: 50
- CSA Standard C22.2 No. 40
- Weatherproof
- Watertight
- CEC:
  Class II, Division 1, Groups E,F,G
  Class III
  Encl. 3, 4
- H-20 Vehicle Load Rating

NOTE: For conduit liner ordering information, see page 140.
✓ – available with Lightning Service™
See Section G for complete details

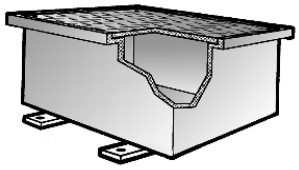

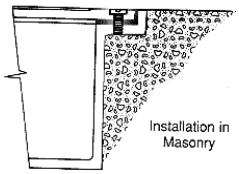

Ordering Information

Cat. #	Wall Thickness (in.)	Length (in.)	Width (in.)	Depth (in.)	Lightning Service
WJBF040404	¼	4	4	4	✓
WJBF060404	¼	6	4	4	✓
WJBF060604	¼	6	6	4	✓
WJBF060606	¼	6	6	6	✓
WJBF080604	¼	8	6	4	✓
WJBF080606	¼	8	6	6	✓
WJBF080804	¼	8	8	4	✓
WJBF080806	¼	8	8	6	✓
WJBF080808	¼	8	8	8	✓
WJBF100806	¼	10	8	6	
WJBF100808	¼	10	8	8	
WJBF101006	¼	10	10	6	✓
WJBF101008	¼	10	10	8	✓
WJBF120606	¼	12	6	6	
WJBF120806	¼	12	8	6	
WJBF120808	¼	12	8	8	✓
WJBF120810	5⁄16	12	8	10	
WJBF121206	¼	12	12	6	✓
WJBF121208	¼	12	12	8	✓
WJBF121212	5⁄16	12	12	12	✓
WJBF121218	5⁄16	12	12	18	
WJBF140806	¼	14	8	6	
WJBF141410	5⁄16	14	14	10	
WJBF161206	¼	16	12	6	
WJBF161208	¼	16	12	8	✓
WJBF161606	¼	16	16	6	
WJBF180806	¼	18	8	6	
WJBF180808	¼	18	8	8	
WJBF181006	5⁄16	18	10	6	
WJBF181206	5⁄16	18	12	6	
WJBF181208	5⁄16	18	12	8	✓
WJBF181210	⅜	18	12	10	
WJBF181212	5⁄16	18	12	12	
WJBF181218	⅜	18	12	18	
WJBF181806	⅜	18	18	6	
WJBF181808	⅜	18	18	8	
WJBF181812	⅜	18	18	12	✓
WJBF181818	⅜	18	18	18	
WJBF241208	⅜	24	12	8	
WJBF241212	⅜	24	12	12	
WJBF241808	⅜	24	18	8	
WJBF241810	⅜	24	18	10	✓
WJBF241812	⅜	24	18	12	
WJBF241818	⅜	24	18	18	
WJBF242412	⅜	24	24	12	
WJBF242418	⅜	24	24	18	
WJBF242424	⅜	24	24	24	
WJBF302412	⅜	30	24	12	
WJBF302418	⅜	30	24	18	
WJBF362418	⅜	36	24	18	
WJBF362424	⅜	36	24	24	

US: 1-866-764-5454 CAN: 1-800-265-0502 Copyright© 2006 Cooper Crouse-Hinds

WEB Junction Box

Heavy Duty Internal Recess Flange for Flush Mounting

Dust-tight
Raintight
NEMA 3

Application:

WEB Junction Boxes are installed:
- Where a heavy duty, dust-tight or raintight enclosure is desired
- To act as pull box for conductors
- To provide openings and space for making splices and taps in conductors
- To provide for branch conduit runs
- To provide access to conductors for maintenance and future system changes
- To enclose and protect electrical devices

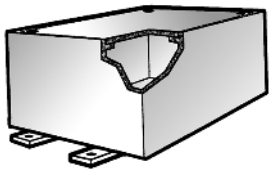

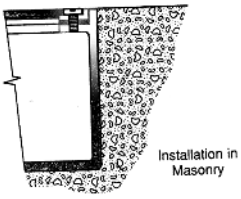

Features:

- Flat neoprene gasket cemented to cover
- Internal equipment mounting pads
- Standard attachable heavy-gauge steel straps for mounting box
- Stainless-steel cover screws
- Internal ground screw
- Optional drilled and tapped conduit entries or slip holes
- Optional mounting plate

Standard Materials:

- Body-*Feraloy*® iron alloy, hot dip galvanized
- Cover – heavy-gauge steel, hotdip galvanized
- Cover screws – stainless steel
- Mounting Strap – heavy-gauge steel, electrogalvanized
- Gasket – neoprene

Certifications and Compliances:

- UL Standard 50
- CSA certified C22.2

Options:

All boxes are available with optional mounting plate, add suffix -MP.
See ordering information beginning on pg. 118 for:
- Drilled and tapped conduit holes
- Slip holes

Ordering Information

Cat. #	Wall Thickness (in.)	Length (in.)	Width (in.)	Depth (in.)
WEB040403	7/32	4	4	3
WEB040404	1/4	4	4	4
WEB060604	9/32	6	6	4
WEB060606	1/4	6	6	6
WEB080804	9/32	8	8	4
WEB080806	1/4	8	8	6
WEB121206	9/32	12	12	6
WEB160606	9/32	16	6	6
WEB160806	1/4	16	8	6
WEB180808	5/16	18	8	8
WEB240606	9/32	24	6	6
WEB240808	5/16	24	8	8
WEB241010	3/8	24	10	10
WEB241210	5/16	24	12	10
WEB241212	5/16	24	12	12
WEB241812	3/8	24	18	12
WEB361212	3/8	36	12	12
WEB361812	3/8	36	18	12
WEB362412	7/16	36	24	12
WEB363612	7/16	36	36	12

 Copyright© 2006 Cooper Crouse-Hinds

DRILLED AND TAPPED CONDUIT OPENINGS OR SLIP HOLES

All W-Series cast-iron junction boxes may be ordered with drilled and tapped conduit openings or slip holes – subject to minimum spacing limitations listed in Table 1.

To order a box from the factory with conduit openings:

Options 1:

Send in a sketch of the box with openings specified (subject to spacing limitations specified in Table 1). **OR**

Option 2:

Step 1: Select one of the four standard arrangements in Table 2, based on number and location of conduit entries.
Step 2: Pick a symbol from Table 3 for each opening in the arrangement (see example).
Step 3: Table 4 lists the maximum size and number of conduit openings by box size and the spacing dimensions. Use Table 4 to verify the openings selected are permitted.

Example – Catalog number logic:

1. Select box required: WAB121208.
2. User wants one ½″ drilled and tapped hole in the top of the box, two 1″ drilled and tapped holes on both sides and three ½″ slip holes in the bottom of the box.
3. Select arrangement 3 because it allows up to three openings per side.
4. Next the symbols for the openings are substituted and written in clockwise order starting with location ''a''. The catalog number is written in three parts; part 1 – box number, part 2 – arrangement number, part 3 – symbols for the conduit openings.
5. For this example the box would be ordered as:

WAB121208-3-0AO C0C 1A1A1A C0C

Box Cat. # | Arrangement # | Symbols for openings

Table 1
Minimum spacing between centers of conduits

Size of Conduit	6″	5″	4″	3½″	3″	2½″	2″	1½″	1¼″	1″	¾″	½″
½″	5	4⅜	3⅝	3⅜	3	2⅝	2⅜	2	1⅞	1¾	1⅝	1½
¾″	5⅛	4½	3¾	3½	3⅛	2¾	2½	2⅛	2	1⅞	1¾	
1″	5¼	4⅝	4	3⅝	3¼	3	2⅝	2⅜	2¼	2		
1¼″	5½	4⅞	4⅛	3⅞	3½	3⅛	2⅞	2½	2⅜			
1½″	5⅝	5	4¼	4	3⅝	3¼	3	2⅝				
2″	6	5⅜	4⅝	4¼	3⅞	3⅝	3¼					
2½″	6¼	5⅝	4⅞	4⅝	4¼	3⅞						
3″	6⅝	6	5⅜	5	4⅝							
3½″	7	6¼	5⅝	5¼								
4″	7¼	6⅝	5⅞									
5″	8	7¼										
6″	8⅝											

Table 2
Standard conduit arrangements

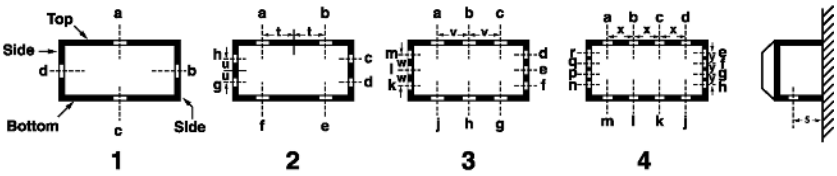

Table 3
Symbols for openings

Conduit Size	Drilled and Tapped Hole	Slip Hole
½″	A	1A
¾″	B	1B
1″	C	1C
1¼″	E	1E
1½″	F	1F
2″	G	1G
2½″	H	1H
3″	J	1J
3½″	K	1K
4″	L	1L
5″	M	1M
6″	N	1N
None	0 (Zero)	0 (Zero)

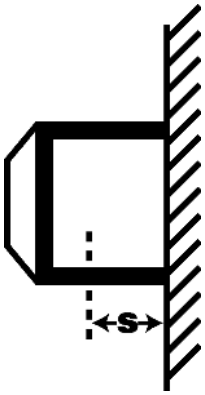

S = Dimension from wall to hole center line

US: 1-866-764-5454 CAN: 1-800-265-0502 Copyright© 2006 Cooper Crouse-Hinds

Ordering Information

Table 4

W Series Cat. #	Maximum Size and Number of Drilled and Tapped Conduit Openings Top and Bottom‡ 1	2	3	4	Sides 1	2	3	4	Spacing Dimensions† s	t	u	v	w	x	y
040402	¾	¾	—	—	¾	¾	—	—	1¼	⅞	⅞	—	—	—	—
040403	1¼	¾	—	—	1¼	¾	—	—	1⅝	⅞	⅞	—	—	—	—
040404	2	¾	—	—	2	¾	—	—	2¼	⅞	⅞	—	—	—	—
050503	1¼	¾	—	—	1¼	¾	—	—	1⅝	1¼	1¼	—	—	—	—
050504	2	1	—	—	2	1	—	—	2¼	1¼	1¼	—	—	—	—
060403	1¼	¾	¾	—	1¼	¾	—	—	1⅝	1⅜	⅞	1¾	—	—	—
060404	2	1½	¾	—	2	¾	—	—	2¼	1⅜	⅞	1¾	—	—	—
060603	1¼	1¼	¾	—	1¼	1¼	¾	—	1¼	1⅜	1⅜	1¾	1¾	—	—
060604	2	1½	¾	—	2	1½	¾	—	2¼	1⅜	1⅜	1¾	1¾	—	—
060606	4	1½	¾	—	4	1½	¾	—	3⅜	1⅜	1⅜	1¾	1¾	—	—
080403	1¼	1¼	1	¾	1¼	¾	—	—	1⅝	1⅝	⅞	2½	—	—	—
080604	2	2	1	¾	2	1½	¾	—	2¼	1⅝	1⅜	2½	1¾	1¾	—
080606	4	2	1	¾	4	1½	¾	—	3⅜	1⅝	1⅜	2½	1¾	1¾	—
080804	2	2	1	¾	3	2	1	¾	2¼	1⅝	1⅝	2½	2½	1¾	1¾
080806	4	2	1	¾	4	2	1	¾	3⅜	1⅝	1⅝	2½	2½	1¾	1¾
080808	4	2	1	¾	4	2	1	¾	4¼	1⅝	1⅝	2½	2½	1¾	1¾
090604	2	1¼	1½	1	2	1½	¾	—	2¼	2¼	1⅜	3	1¾	2	—
100604	2	2	1½	1	2	1½	¾	—	2¼	2½	1⅜	2¾	1¾	2½	—
100804	2	2	1½	1	2	2	1	¾	2¼	2½	1⅝	2¾	2½	2½	1¾
100806	4	3	1½	1	4	2	1	¾	3⅜	2½	1⅝	2¾	1¾	2½	1¾
100808	5	3	1½	1	5	2	1	¾	4½	2½	1⅝	2¾	2½	2½	1¾
101006	4	3	1½	1	3	3	1½	1	2⅜	2½	2½	2¾	2¾	2½	2½
101008	5	3	1½	1	5	3	1½	1	4¼	2½	2½	2¾	2¾	2½	2½
120604	2	2	2	1½	2	1½	¾	—	2¼	3	1⅜	4	1¾	2¾	—
120606	4	4	2½	1½	4	1½	¾	—	3⅜	3	1⅜	4	1¾	2¾	—
120806	4	4	2½	2½	4	2	1	¾	3⅜	3	1⅝	4	2½	2¾	1¾
120808	5	4	2½	2½	5	2	1	¾	4¼	3	1⅝	4	2½	2¾	1¼
121204	2	2	2	1½	2	2	2	1½	2¼	3	3	4	4	2¾	2¾
121206	4	4	2½	1½	4	4	2½	1½	3⅜	3	3	4	4	2¾	2¾
121208	5	4	2½	1½	5	4	2½	1½	4¼	3	3	4	4	2¾	2¾
121212	6	4	2½	1½	6	4	2½	1½	5	3	3	4	4	2¾	2¾
121218	6	4	2½	1½	6	4	2½	1½	5	3	3	4	4	2¾	2¾
140806	4	4	3	2	4	2	1	¾	3⅜	3½	1⅝	4½	2½	3½	1¾
141206	4	4	3	2	4	4	2½	1½	3⅜	3½	3	4½	4	3½	2¾
141410	6	4	3	2	6	4	3	2	5	3½	3½	4½	4½	3½	3½
160606	4	4	3½	2½	4	1½	¾	—	3⅜	4	1½	5⅜	2	4	—
160806	4	4	3½	2½	4	2½	1½	¾	3⅜	4	2	5⅜	2⅝	4	2
161206	4	4	3½	2½	4	4	2½	1½	3⅜	4	3	5⅜	4	4	3
161208	5	5	3½	2½	5	4	2½	1½	4¼	4	3	5⅜	4	4	3
161606	4	4	3½	2½	4	4	3½	2½	3⅜	4	4	5⅜	5⅜	4	4
180806	4	4	4	2½	4	2½	1¼	¾	3⅜	4½	2	6	2⅝	4½	2
180808	5	5	4	2½	5	2½	1¼	¾	4¼	4½	2	6	2⅝	4½	2
181206	4	4	4	2½	4	4	2½	1½	3⅜	6½	2⅞	5½	3⅞	4	2¾
181208	5	5	4	2½	5	4	2½	1½	4¼	4½	3	5½	4	4	2¾
181210	6	5	4	2½	6	4	2½	1½	5	4¼	3	5½	4	4	2¾

†Spacing dimensions apply to drilled and tapped holes. Space has been provided for a locknut and bushing when drilled and tapped holes are required.
‡Top and bottom are the longer dimensions on enclosures which are not square.

 Copyright© 2006 Cooper Crouse-Hinds

Table 4 (continued)

W Series Cat. #	Maximum Size and Number of Drilled and Tapped Conduit Openings Top and Bottom‡ 1	2	3	4	Sides 1	2	3	4	Spacing Dimensions† s	t	u	v	w	x	y
181212	6	5	4	2½	6	4	2½	1½	5	4½	3	5½	4	4	2¼
181218	6	5	4	2½	6	4	2½	1½	5	4½	3	5½	4	4	2¾
181806	4	4	4	2½	5	5	4	2½	3⅜	4½	4	6	5⅜	4½	4
181808	5	5	4	2½	5	5	3½	2½	4¼	4½	4	6	5⅜	4½	4
181812	6	6	4	2½	6	6	4	2½	5	4½	4½	6	6	4½	4½
240606	4	4	4	4	4	1½	¾	—	3⅜	6¾	1⅜	8	1¾	6	—
240808	5	5	5	4	5	2½	1¼	¾	4¼	6¾	4½	8	2⅝	6	2
241010	6	6	5	4	6	3	1½	1	5	6½	2½	7	2¾	5¾	2½
241208	5	5	5	4	5	4	2½	1½	4¼	6½	2⅞	7	3⅞	5¾	2¾
241210	6	6	5	4	6	4	2½	1½	5	6½	3	7	4	5¾	2¾
241212	6	6	5	4	6	4	2½	1½	5	6½	2⅞	7	3⅞	5¾	2¾
241808	5	5	5	4	5	5	4	2½	4¼	6½	4½	7	5¾	5¾	4
241810	6	6	5	4	6	6	4	2½	5	6½	4½	7	5¾	5¾	4
241812	6	6	5	4	6	5	4	2½	5	6½	4½	7	5¾	5¾	4
242408	5	5	5	4	5	5	5	4	4¼	6½	6½	7	7½	5¾	5¾
242412	6	6	5	4	6	6	5	4	5	6½	6½	7	7½	5¾	5¾
242424	6	6	5	4	6	6	5	4	6½	6¾	6½	7	7½	5¾	5¾
302412	6	6	6	5	6	6	5	4	5	7½	6¾	10	8	7½	6
361212	6	6	6	6	6	4	2½	1½	5	8¾	3	12	4	9	2¾
361812	6	6	6	6	6	5	4	2½	5	8¾	4½	12	4½	9	4
362412	6	6	6	6	6	6	5	4	5	8¾	6¾	12	8	9	6
363612	6	6	6	6	6	6	6	6	5	8¾	8¾	12	12	9	9

†Spacing dimensions apply to drilled and tapped holes. Space has been provided for a locknut and bushing when drilled and tapped holes are required.
‡Top and bottom are the longer dimensions on enclosures which are not square.

US: 1-866-764-5454 CAN: 1-800-265-0502 Copyright© 2006 Cooper Crouse-Hinds

Application:

RS, RSM, RSS junction boxes are installed in conduit systems to:

- act as pull box for conductors
- provide openings and space for making splices and taps in conductors
- provide for branch conduit runs
- provide access to conductors for maintenance and future system changes

Features:

- Junction box bodies accept wide range of hub plates permitting varied hub arrangements and sizes.
- Stocking a few components provides for many specific needs.
- Future system expansion easily accomplished by substituting hub plates for currently installed plates.
- Suitable for use where boxes with integral hubs cannot satisfy requirements.
- Suitable for surface mounting outdoors or indoors in rigid conduit runs.

Standard Materials:

- Bodies and hub plates – *Feraloy*® iron alloy
- Gaskets – cork

Standard Finishes:

- *Feraloy* iron alloy – electrogalvanized and aluminum acrylic paint

Certifications and Compliances:

- UL Standard: 514A
- CSA Standard: C22.2 No. 18

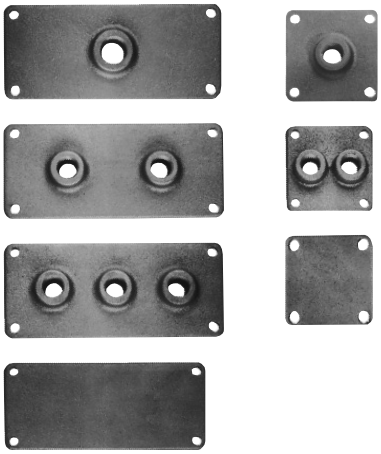

Junction Boxes†

Approximate Inside Dimensions

Size	Cat. #
8½ x 8½ x 4	RS1
8½ x 4½ x 4	RSM1
4½ x 4½ x 4	RSS1

Replacement Cover Gaskets

Size	Cat. #
8½ x 8½	GASK61
8½ x 4½	GASK63
4½ x 4½	GASK64

Conduit Hub Plates‡

For 8½ x 4 inch Sides of RS and RSM Boxes

Size	One Hub Cat. #	Two Hubs Cat. #	Three Hubs Cat. #
½	RSP1	RSP11	RSP111
¾	RSP2	RSP22	RSP222
1	RSP3	RSP33	RSP333
1¼	RSP4	RSP44	RSP444
1½	RSP5	RSP55	RSP555
2	RSP6	RSP66	
2½	RSP7		
3	RSP8		

Blank Hub Plate Cat. #
RSP0

For 4½ x 4 inch Sides of RSM and RSS Boxes

Size	One Hub Cat. #	Two Hubs Cat. #
½	RSMP1	RSMP11
¾	RSMP2	RSMP22
1	RSMP3	
1¼	RSMP4	
1½	RSMP5	
2	RSMP6	
2½	RSMP7	

Blank Hub Plate Cat. #
RSMP0

Replacement Hub Plate Gaskets

Size	Cat. #
8½ x 4	GASK66

Size	Cat. #
4½ x 4	GASK65

† Includes body, top cover with gasket, 4 gaskets for side plates, and 20 bolts.
‡ Hub plates only. Gaskets not included.

NOTE: For conduit liner ordering information, see page 140.

 Copyright© 2006 Cooper Crouse-Hinds

6F GUE, GUB Junction Boxes

Cl. I, Div. 1 & 2, Groups B,C,D
Cl. II, Div. 1, Groups E,F,G
Cl. II, Div. 2, Groups F,G
Cl. III
NEMA 4*, 7BCD, 9EFG
EEx d IIC T6, IP66†

Explosionproof
Dust-Ignitionproof
Raintight
Wet Locations
Watertight

Application:

GUE, GUB series junction boxes are used in threaded rigid conduit systems in hazardous areas:
- to function as a splice box, pull box or equipment and device enclosure
- indoors and outdoors

Features:

- Threaded construction throughout permits use in hazardous areas.
- Bodies have thick walls so they can be factory or field drilled and tapped to meet NEC/CEC requirements for Class I hazardous areas.
- Covers are provided with a neoprene ''O'' ring gasket to meet NEMA/EEMAC 4 requirements for a watertight seal*
- Internal grounding lug provides a means to ground enclosed equipment.
- Boxes are machined for field installed mounting plates.
- GUB boxes are CENELEC certified when ordered with Suffix SA ATEX.

Standard Materials:

- Bodies – *Feraloy*® iron alloy
- Covers – copper-free aluminum

Standard Finishes:

- *Feraloy* iron alloy – GU, GUE, GUB01, GUB02 – electrogalvanized and aluminum acrylic paint. All other boxes – zinc chromate primer and aluminum acrylic paint
- Copper-free aluminum – natural

Options:

Description	Suffix to be Added to Cat. #
Material –	
Feraloy iron alloy covers	WOD
For GU, GUE, GUB01, GUB02, GUB03 and GUB06 to be furnished in copper-free aluminum	SA
Copper-free aluminum boxes with ATEX certification	SA ATEX
Factory installed mounting plate for relays, terminal blocks, electrical devices, etc	MP
Factory installed terminal blocks	Information on request

Certifications and Compliances:

- NEC/CEC:
  Class I, Division 1 & 2, Groups B,C,D
  Class II, Division 1, Groups E,F,G
  Class II, Division 2, Groups F,G
  Class III
- UL Standard: 886
- CSA Standard: C22.2 No. 30
- CENELEC: EEx d IIC, IP66† ATEX Certificate: PTB 01 ATEX 1019 U

✓ – available with Lightning Service™
See Section G for complete details

Junction Boxes Without Hubs**

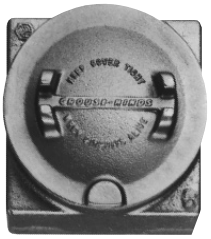

GU ✓
4 15/16″ x 4 15/16″ x 4⅛
3⅝″ cover opening

GUE
5 5/16″ x 5 5/16″ x 5⅜
3⅝″ cover opening

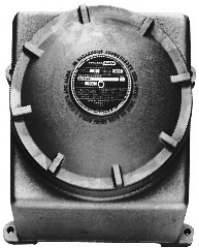

GUB01 ✓
6½″ x 7″ x 5¾
5⅜″ cover opening

GUB02 ✓
8″ x 10″ x 5⅞
7″ cover opening

GUB06 8½″ x 10″ x 6⅞″
7″ cover opening

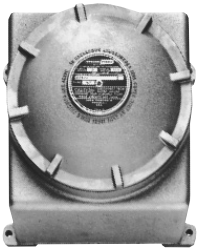

GUB03
11″ x 12″ x 8 13/16″
9⅝″ cover opening

GUB01110★
14″ x 18″ x 13½
12¼″ cover opening

GUB15151 19″ x 21″ x 16⅝″
16¾″ cover opening

GUB04
11″ x 12″ x 8 11/16
9⅝″ cover opening

GUB08
7″ cover opening
8½″ x 10″ x 6 13/16

Ordering Information:

Junction boxes listed can be furnished with drilled and tapped conduit openings, subject to the limitations of maximum opening, number and spacing shown in Tables 1, 2 and 4.

To Order:

Step 1
Select the box required from photos at left and dimensional drawings on page 123.
Step 2
Select standard conduit arrangement from Table 1.
Step 3
Determine maximum size conduit opening required from Table 2 (consider conduit opening spacing from Table 4).
Step 4
Select appropriate symbol for required drilled and tapped holes from Table 3.
Example:
Step 1 – box required GUB06
Step 2 – arrangement 108
Step 3 – openings – 1½″ at ''a'' and ''c''; 1″ at ''b'' and ''d''.
Step 4 – symbols are substituted and written in **clockwise order starting with location ''a''.** For this example: FCFC Complete Cat. No. is made up of three parts: Part 1 – box number; Part 2 – arrangement number; Part 3 – symbols for conduit openings. For this example: GUB06-108-FCFC. When no opening is required at a particular location, use symbol ''0'' (zero).

If none of the standard arrangements meet requirements, send a sketch showing junction box number with size and location of each opening desired.

* Not available on GUB01110 and GUB15151.
** External dimensions provided.
† Order suffix SA ATEX. GUB01110 and GUB15151 are rated IP54.

NOTE: For conduit liner ordering information, see page 140.
★GUB01110 listed for Class I, Div. 1, Groups C & D only in Canada (CSA).

US: 1-866-764-5454 CAN: 1-800-265-0502 Copyright© 2006 Cooper Crouse-Hinds

Table 1/Arrangements of Drilled and Tapped Conduit Openings – For other arrangements, send sketch and complete description

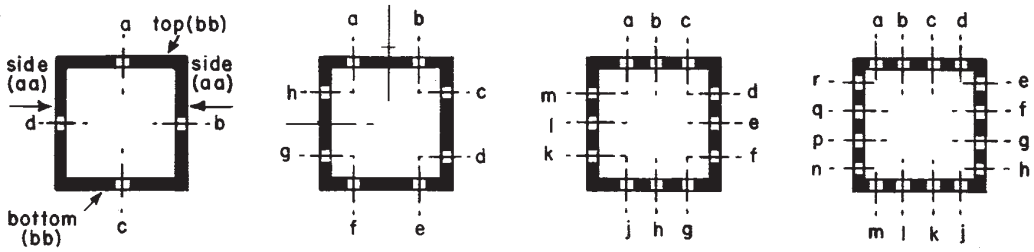

108 109 110 111

Conduit opening arrangements shown in the illustration should meet the majority of requirements.

These GUB junction boxes will be supplied with drilled and tapped openings up to the maximum size and number shown in Table 2.

Table 2/Maximum Size & No. of Drilled & Tapped Holes

	Top & Bottom (bb)†				Each Side (aa)†				Back‡			
Cat. #	1	2	3	4	1	2	3	4	1	2	3	4
Group D*												
GU	1	1			1	1			3	1	¾	¾
GUE	2	1			2	1			2	1	¾	¾
GUB01	2	1½	¾		2	1½	1	½	1	¾	¾	¾
GUB02	2	2	1	¾	2	2	1½	1	¾	¾	¾	¾
GUB06	2	2	1	¾	2	2	1½	1	2	2	2	2
GUB08	2	2	1	¾	2	2	1½	1	2	2	2	2
GUB03	2	2	1½	1	2	2	2	1¼	4	4	3½	3
GUB04	2	2	1½	1	2	2	2	1¼	4	4	3½	3
GUB01110	2	2	2	1½	2	2	2	2	6	6	4	3½
GUB15151	5	4	3½	2½	5	4	4	3	6	6	6	6
Group C ♦												
GU	1	1			1	1			3	1	¾	¾
GUE	2	1			2	1			2	1	¾	¾
GUB01	2	1¼	½		2	1¼	½		¾	¾	¾	¾
GUB02	2	1½	¾		2	2	1¼	½	¾	¾	¾	¾
GUB06	2	1½	¾		2	2	1¼	½	2	2	2	1½
GUB08	2	1½	¾		2	2	1¼	½	2	2	2	1½
GUB03	2	2	1¼	¾	2	2	1½	1	4	3½	2½	2½
GUB04	2	2	1¼	¾	2	2	1½	1	4	3½	2½	2½
GUB01110	2	2	2	1¼	2	2	2	2	6	6	4	3½
GUB15151	5	4	3	2	5	4	3½	2½	6	6	6	5
Group B ♦ ♦												
GU	1	1			1	1			3	1	¾	¾
GUE	2	1			2	1			2	1	¾	¾
GUB01	2	1¼	½		2	1¼	½		¾	¾	¾	¾
GUB02	2	1½	¾		2	2	1¼	½	¾	¾	¾	¾
GUB06	2	1½	¾		2	2	1¼	½	2	2	2	1½
GUB08	2	1½	¾		2	2	1¼	½	2	2	2	1½
GUB03	2	2	1¼	¾	2	2	1½	1	4	3½	2½	2½
GUB04	2	2	1¼	¾	2	2	1½	1	4	3½	2½	2½
GUB01110	2	2	2	1¼	2	2	2	2	4	4	4	4
GUB15151	4	4	3½	2½	4	4	3½	2½	4	4	4	4

Table 3/Drilled & Tapped Holes

Size	Symbol
½	A
¾	B
1	C
1¼	E
1½	F
2	G
2½	H
3	J
3½	K
4	L
none	0

* Group D chart is based on use of staggered unions. If adjacent unions are desired, additional spacing may be necessary.

† Sidewall and top and bottom sizes are based on all openings being in line.

‡ Backwall sizes are based on: two per side – diagonal corners; four per side – one in each corner; three per side – triangular pattern with two on adjacent corners on long wall and third in center of opposite long wall.

♦ Conduit seals are required within 1½″ of all conduit entrances for Class I, Group C hazardous locations.

♦ ♦ Conduit seals are required within 1½″ of all conduit entrances for Class I, Group B hazardous locations.

NOTE: For conduit liner ordering information, see page 140.

 Copyright© 2006 Cooper Crouse-Hinds

Table 4/Conduit Spacings

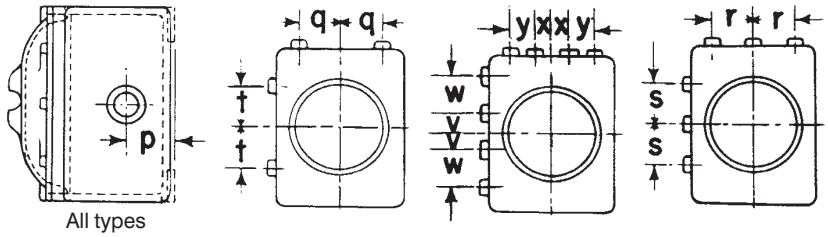

2, 3 or 4 entrances for conduit opening spacings on top, bottom or sides, all types.

Type	p	q	r	s	t	v	w	x	y
GU	1 3/8	1	—	—	1	—	—	—	—
GUE	1 7/8	1 1/8	1 1/8	—	1 1/8	—	—	—	—
GUB01	2 1/16	1 5/8	2 1/8	2 1/8	1 5/8	7/8	1 3/4	25/32	1 9/16
GUB02	2 1/16	1 21/32	2 1/16	2 5/16	1 21/32	1 1/32	2 1/16	7/8	1 3/4
GUB06	2 1/16	1 21/32	2 5/16	2 5/16	1 21/32	1 1/32	2 1/16	7/8	1 3/4
GUB08	2 1/16	1 21/32	2 1/16	2 1/16	1 21/32	1 1/32	2 1/16	7/8	1 3/4
GUB03	3 3/8	2 1/2	3 5/16	3 5/16	3	1 5/32	2 5/16	1 5/32	2 5/16
GUB04	3 3/8	1 21/32	3 5/16	3 5/16	3	1 5/32	2 5/16	1 5/32	2 5/16
GUB01110	4 3/4	3	4	6	4	2	4	1 21/32	3 5/16
GUB15151	6	4	5 1/4	5 7/8	4	2	4	2	4

Dimensions

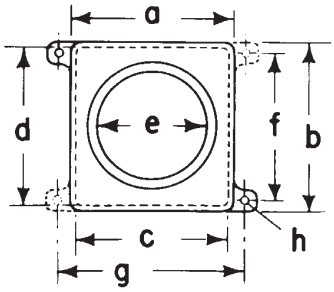

GUB 01, 02, 03, 06, 01110, and 15151. Dotted mounting feet are included on GUB 03, 01110, and 15151 only. GU and GUE are provided with attachable mounting strap.

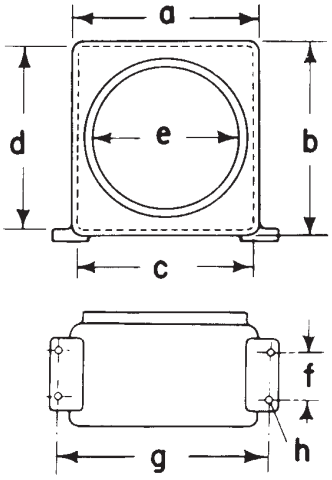

GUB 04 and 08

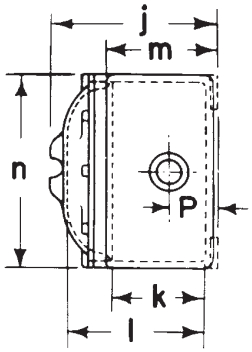

All types

Type	a	b	c‡	d‡	e	f	g	h	j	k‡	l‡	m	n
GU	4 15/16	4 15/16	3 13/16	3 13/16	3 5/8	—	—	—	4 1/8	1 9/16	3 7/16	2 3/8	4 1/8
GUE	5 5/16	5 5/16	4 3/16	4 3/16	3 5/8	—	—	—	5 3/8	2 1/4	3 7/16	3 1/2	4 1/8
GUB01	6 1/2	7	6 1/2	5 7/8	5 3/8	5 3/4	7 1/2	13/32	5 3/4	3 1/16	4 1/2	4 1/16	6 1/4
GUB02	8	10	7 1/8	9 1/8	7	8 3/4	9	13/32	5 7/8	3	4 5/8	4 1/16	7 3/4
GUB06	8 1/2	10	7 3/8	8 7/8	7	8 3/4	9 1/2	7/16	7 3/8	4 1/4	5 13/16	5 1/4	7 3/4
GUB08	8 1/2	10	7 3/8	8 7/8	7	2 1/2	9 5/8	7/16	7 3/8	4 1/4	5 3/16	5 1/4	7 3/4
GUB03	11	12	9 3/4	10 3/4	9 5/8	10 3/4	12 1/8	7/16	8 13/16	5	7 3/8	6 5/8	11
GUB04	11	12	9 3/4	10 3/4	9 5/8	3 1/2	12 1/8	7/16	8 11/16	5	7 3/8	6 1/2	11
GUB01110	14 1/16	18 1/16	13	17	12 1/4	16	16	1	13 1/2	6 13/16	10 3/4	9 3/4	14
GUB15151	20 7/8	18 7/8	19 1/8	17 1/8	16 3/4	18	21	1	16 5/8	9	13 3/16	11 3/8	18

‡ Inside Dimensions

NOTE: For conduit liner ordering information, see page 140.

US: 1-866-764-5454 CAN: 1-800-265-0502 Copyright© 2006 Cooper Crouse-Hinds

Mounting Plate Dimensions

Table 5/Mounting Plate Dimensions

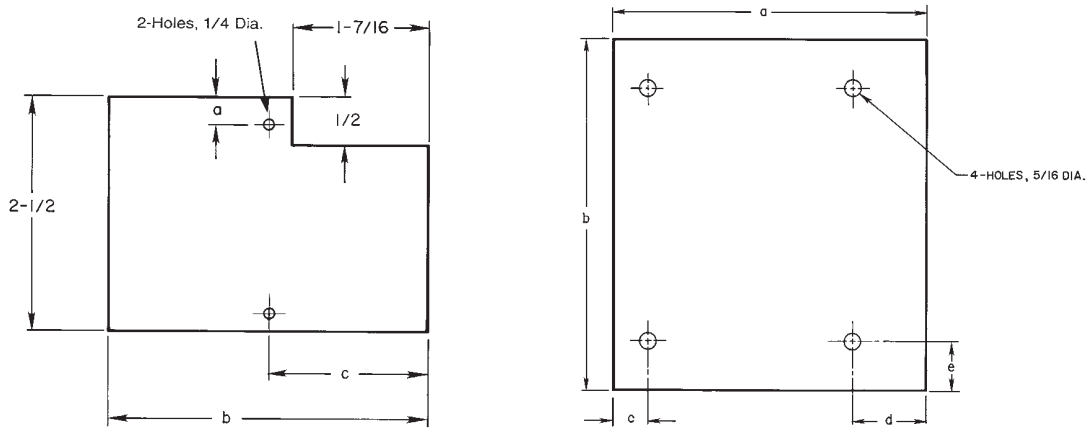

Box Cat. #	Mounting Plate Kit Cat. #	a	b	c	d	e
GU	GU-MPK1	9/32	3 3/8	1 43/64	—	—
GUE	GUE-MPK1	9/32	3 3/8	1 43/64	—	—
GUB01	GUB-MP01	4 3/8	5	3/8	1	1
GUB02	GUB-MP02	5 9/16	6 1/4	5/8	1 5/16	7/8
GUB03	GUB-MP03	8	9	15/16	1 5/16	1 1/2
GUB04	GUB-MP03	8	9	15/16	1 5/16	1 1/2
GUB06	GUB-MP02	5 9/16	6 1/4	5/8	1P5/16	7/8
GUB08	GUB-MP02	5 9/16	6 1/4	5/8	1 5/16	7/8
GUB01110	GUB-MP01110	8 3/4	12	7/16	1 7/16	1 3/4
GUB15151	GUB-MP15151	14	14	1 5/8	1 5/8	1 5/8

NOTE: For conduit liner ordering information, see page 140.

 Copyright© 2006 Cooper Crouse-Hinds

6F Threaded Covers for GUB Junction Boxes

Cl. I, Div. 1 & 2, Groups B‡,C,D	Explosionproof
Cl. II, Div. 1, Groups E,F,G	Dust-Ignitionproof
Cl. II, Div. 2, Groups F,G	Raintight
Cl. III	Wet Locations
NEMA 7B‡CD,9EFG	Watertight

Application:

GUB and EPC threaded covers are used with GUB boxes in control systems in hazardous areas:

- indoors and outdoors
- in three categories:

Flat – for normal use; furnished with standard GUB boxes
Glass window – to provide visibility of meter indications when used to enclose meters
Domed – for increasing volume of GUB to make it easier to splice and pull large conductors

Features:

- Domed – more suitable for use when splices of heavy conductors are made and enclosed, since the conductors may be pulled in with the ends outside the box. After the splices are made, they do not have to be crowded back into the box
- Glass window – has maximum diameter glass to give best visibility. In selecting, the diameter of the meter face should match or be slightly smaller than window diameter.

Standard Materials:

- Copper-free aluminum

Standard Finishes:

- Natural

Certifications and Compliances:

- NEC:
  GUB0101, -0102, -0103, -714, -7110, EPC2110, EPC2151
  Class I, Division 1 & 2, Groups B,C,D
  Class II, Division 1, Groups E,F,G
  Class II, Division 2, Groups F,G
  Class III

All other covers:
Class I, Division 1 & 2, Group D
Class II, Division 1, Groups E,F,G
Class II, Division 2, Groups F,G
Class III

- CEC:
  Class I, Division 1 & 2, Group D
  Class II, Division 1, Groups E,F,G
  Class II, Division 2, Groups F,G
  Class III

Note: GUB covers are suitable for use in hazardous areas only when used with appropriate GUB series enclosures.

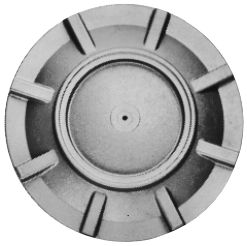

GUB flat cover

GUB glass cover

GUB dome cover

Body† Size	Flat Cover Cat. #	Glass Window Cover Cat. #	Dome Cover Cat. #	Dome Cover Nominal Depth
GUB01	GUB0101	GUB0110	GUB714 GUB7110	4 10
GUB02 GUB06 GUB08	GUB0102	GUB0108	GUB726	6
GUB03 GUB04	GUB0103	GUB0109	GUB738 GUB7316	10 17
GUB01110	EPC2110		EPC2115	5
GUB15151	EPC2151		EPC21116	16

† Bodies are grouped by size of cover opening and take any of the covers shown in the group.

‡Check certifications and compliances for specific hazardous area ratings for each catalog #.

Specify body and conduit openings in normal manner (see page 120) and state Cat. No. of cover required.

Dimensions

Flat covers

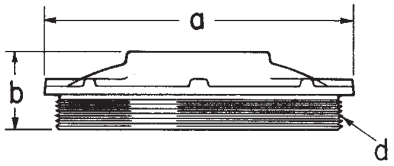

GUB with dome covers

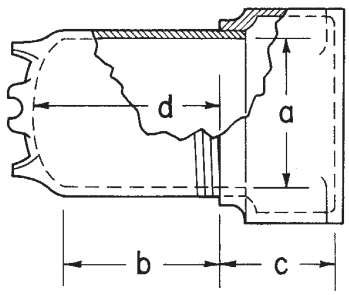

Flat Covers

Cat. #	a	b	Thread Size d
GUB0101	6 5/16	1 23/32	5 5/8-12
GUB0102	7 13/16	1 15/16	7 1/8-12
GUB0103	11 1/16	2 3/4	9 3/4-8
EPC2110	12 7/8	5 5/32	12.660-8
EPC2151	17	5 9/16	16.910-8

Glass Covers

Cat. #	a	b	Window Opening c	Thread Size d
GUB0110	6 5/16	1 13/16	3 5/8	5 5/8-12
GUB0108	7 13/16	2 1/16	4 3/4	7 1/8-12
GUB0109	11 1/16	1 15/16	6 13/16	9 3/4-8

Glass covers

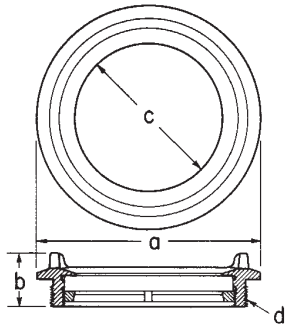

Dome Covers

Cat. #	a	b	For Dimensions C: GUB02	GUB06	GUB08	all others	d
GUB714	5 1/16	2 3/4				4 3/16	4
GUB7110	5 1/16	9 1/8				4 3/16	10 3/8
GUB726	6 3/8	5 1/8	4 1/8	5 1/8	5 1/8		6 3/4
GUB738	8 7/8	8				6 5/8	10 1/2
GUB7316	8 7/8	15 1/4				6 5/8	17 3/8
EPC2115	11 9/16	3 9/16				8 1/2	6 9/16
EPC21116	11 9/16	14 9/16				8 1/2	17 9/16

NOTE: For conduit liner ordering information, see page 140.

US: 1-866-764-5454 CAN: 1-800-265-0502 Copyright© 2006 Cooper Crouse-Hinds

GUB Equipment Housings

Cl. I, Div. 1 & 2, Groups B†,C,D Explosionproof
Cl. II, Div. 1, Groups E,F,G Dust-Ignitionproof
Cl. II, Div. 2, Groups F,G Raintight
Cl. III Wet Locations
NEMA 4,7B†CD,9EFG Watertight

Application:

GUB equipment housings are used in threaded rigid conduit systems in hazardous areas:
- to house relays, contactors, terminal blocks or other equipment and devices
- indoors or outdoors

Features:

- Supplied with dome cover and adjustable mounting position plate which extends into dome cover.
- Mounting plate is adjustable. It may be located in center of cover so small devices can be mounted on both sides of plate or toward either side of dome cover when larger devices are mounted on one side of plate (see dimension ''p'').

Standard Materials:

- Bodies – *Feraloy*® iron alloy
- Covers – copper-free aluminum
- Mounting plates – sheet steel

Standard Finishes:

- *Feraloy* iron alloy – electrogalvanized and aluminum acrylic paint
- Copper-free aluminum – natural
- Sheet steel – zinc plated

Options:

Description	Suffix to be Added to Cat. #
Material – Bodies, copper-free aluminum	SA
Other sizes of boxes and covers available	Information on request

Certifications and Compliances:

- NEC:
  GUB3100, GUB3177
  Class I, Division 1 & 2, Group D
  Class II, Division 1, Groups E,F,G
  Class II, Division 2, Groups F,G
  Class III

  GUB1440, GUB1100
  Class I, Division 1 & 2, Groups B,C,D
  Class II, Division 1, Groups E,F,G
  Class II, Division 2, Groups F,G
  Class III
- UL Standard: 886
- CSA Standard: C22.2 No. 30

GUB with cover removed showing mounting plate.

GUB with dome cover.

Body Size	Nominal Depth of Cover	Dimension l	Dimension m	Width of Mounting Plate	Cat. #
GUB01	4	3 5/16	4	3 13/16	GUB1440
	10	9 13/16	10 7/16		GUB1100
GUB03	10	9 1/8	10 1/16	6 1/2	GUB3100
	17	16 3/8	17 3/8		GUB3177

NOTE: Conduit seals are required within 1½″ of all conduit entrances for Class I, Division 1, Group B hazardous areas. For other sealing requirements consult the National Electrical Code®/Canadian Electrical Code.

†Check Certifications and Compliances for specific hazardous area ratings for each catalog #.

Dimensions

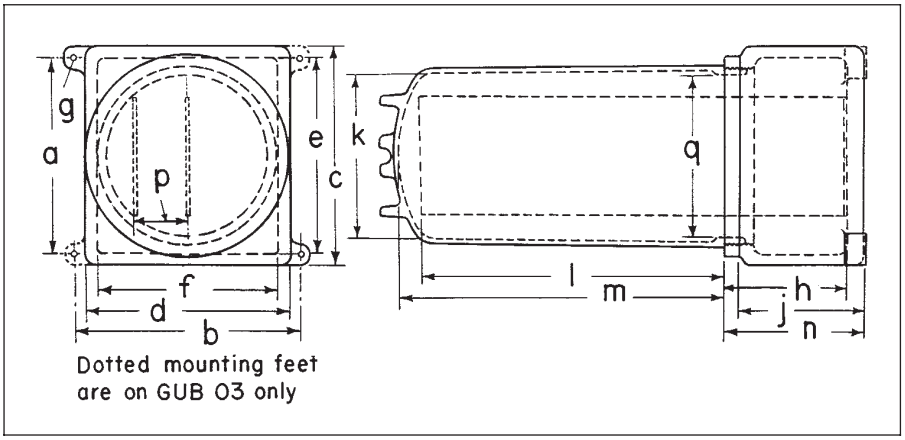

Body Size	GUB01	GUB03
a	5 3/4	10 3/4
b	7 1/2	12 1/8
c	7	12
d	6 1/2	11
e	6 1/2	10 3/4
f	5 7/8	9 3/4
g	13/32	7/16
h	4 3/16	6 5/8
j	4	6 5/8
k	5	9 1/8
l	see listing	
m	see listing	
n	4 7/8	7 5/8
p	1 1/2 max	2 7/8 max
q	5 1/16	8 7/8

NOTE: For conduit liner ordering information, see page 140.

 Copyright© 2006 Cooper Crouse-Hinds

6F EJB Junction Boxes

Dimensions Pg. 132

Cl. I, Div. 1 & 2, Groups B,C,D
Cl. II, Div. 1, Groups E,F,G
Cl. II, Div. 2, Groups F,G
Cl. III
NEMA 3,4,7,9
EEx d IIB+H_2 T6, IP66**

Explosionproof
Dust-Ignitionproof
Raintight
Wet Locations

Application:

EJB junction boxes are used in threaded rigid conduit systems in hazardous areas:

- As a junction or pull box
- To provide enclosures for splices and branch circuit taps
- For housing terminal blocks, relays and other electrical devices
- Indoors or outdoors in damp, wet, dusty, corrosive, hazardous locations
- Where exposure to frequent or heavy rain, water, spray, moisture, and humidity is common; such as: offshore drilling facilities, cooling towers, coal preparation and handling facilities and sewage and waste water treatment plant
- In areas which are hazardous due to the presence of hydrogen or gases and vapors of equivalent hazard such as found in process industries, missile bases and gas manufacturing plants

Features:

- Style C boxes provided with Aluminum plate cover as standard, allowing for field addition of cover device holes.
- Stainless steel cover bolts (Style C only).
- Ground joint cover opening provides maximum opening for pulling wires or mounting equipment.
- Walls of bodies may be drilled and tapped for conduit entries as shown in listings.
- Stud bolts in diagonally opposite corners of body aid in aligning cover to body during installation (not furnished with hinged covers).
- All Style C bodies are provided with captive, quick release hex head stainless steel bolts with spring loaded action which provides clear indication that cover bolts are fully retracted from the body.
- External flange design – wide unobstructed cover opening provides a completely accessible interior for wiring and electrical equipment.
- Square corners of enclosure body provide maximum interior space and area for conduit openings.
- Internal grounding lug provides a means to ground enclosed equipment.
- Special neoprene cover gasket provides a watertight seal to meet NEMA 4 requirements, and provides superior protection for enclosed equipment against water/corrosion.
- Enclosures are machined for field installed mounting plates.
- Detachable mounting feet provide mounting flexibility. No need to replace enclosure if mounting feet are broken.
- Optional stainless steel hinges provide convenient and easy access for inspection, maintenance and systems changes.
- Enclosures are machined to accept field installed hinges.
- CENELEC certified when ordered with suffix ATEX (Style C only).

NOTE: For conduit liner ordering information, see page 140.

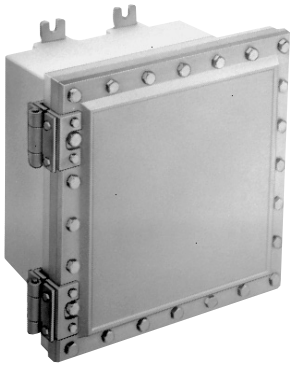

EJB121208 with optional hinged cover

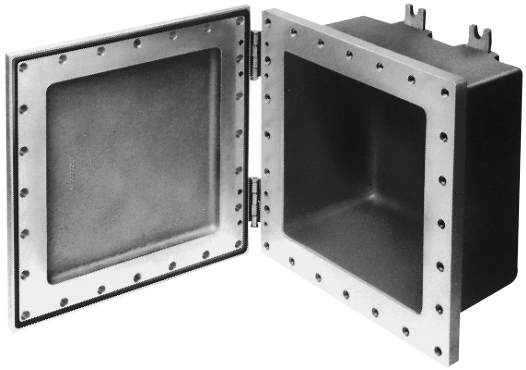

EJB121208 with optional hinged cover and standard neoprene cover gasket

Standard Materials:

- Body and cover – copper-free aluminum (suffix-SA items and Style C); *Feraloy*® iron alloy (Style D)
- Gasket – neoprene
- Cover bolts – stainless steel (Style C), steel (Style D)
- Hinges – stainless steel

Standard Finishes:

- Copper-free aluminum – natural
- *Feraloy* iron alloy – electrogalvanized and aluminum acrylic paint
- Steel – electrogalvanized
- Extruded aluminum – natural

Certifications and Compliances:

- NEC/CEC
  Class I, Divisions 1 and 2, Groups B*, C† and D‡
  Class II, Division 1, Groups E, F and G
  Class II, Division 2, Groups F and G
  Class III
  Class I, Zones 1 and 2
- UL Standard 886
- cUL to CSA Standard C22.2 No. 30
- Style C only: CENELEC EEx d IIB + H_2 T6, IP66
  ATEX certificate: PTB 01 ATEX 1020 U (when ordered with-ATEX suffix)
- Enclosure Type 3, 3R, 4, 7BCD, 9EFG

Options

Description	Suffix to be added to Cat. No.
Hinged covers. Hinges mounted on left (short side)	S598
Available on all Style C and the following Style D enclosures: EJB101008-SA, EJB120804, EJB120804-SA, EJB120808-SA, & EJB141006-SA	
Hinge kits for field installation (no field machining required) –	
EJB100806 through 361208	EJB KIT 1 (2 hinges)
EJB361808	EJB KIT 3 (3 hinges)
EJB362408	EJB KIT 4 (4 hinges)
For EJB101008-SA, EJB120804, EJB120804-SA, EJB120808-SA & EJB141006-SA	EJB KIT 5 (2 hinges)
Factory installed mounting plates for relays, terminal blocks, electrical devices, etc. – Aluminum	MP
Mounting plate kit for field installation (kit includes aluminum mounting plate, pillars and mounting hardware). No field machining required	See Ordering Information on page 130
Factory installed terminal blocks	Information on request

Gasket Detail

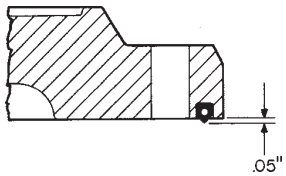

Cross section of cover. Gasket extends beyond flange surface by .05″.

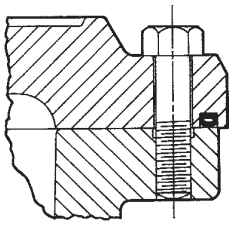

Bolted cover and body assembled. Compressed gasket forms watertight seal.

* For Group B, install sealing fitting in each conduit run within 18″ of the enclosure.

† EJB361208, 361808, 362408 and all style D enclosures require sealing fittings within 18″ of enclosure for each conduit run for Group C locations.

‡ Style D enclosures require sealing fittings within 18″ of enclosure for each conduit run for Group D locations.

* * Order suffix ATEX (style C only).

US: 1-866-764-5454 CAN: 1-800-265-0502 Copyright© 2006 Cooper Crouse-Hinds

EJB Junction Boxes

Dimensions Pg. 132

Cl. I, Div. 1 & 2, Groups B,C,D
Cl. II, Div. 1, Groups E,F,G
Cl. II, Div. 2, Groups F,G
Cl. III
NEMA 3,4,7,9
EEx d IIB+H_2 T6, IP66**

Explosionproof
Dust-Ignitionproof
Raintight
Wet Locations

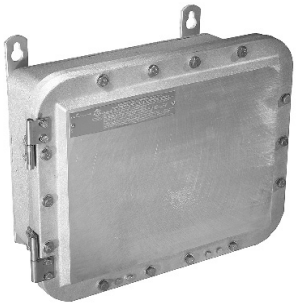

Style D

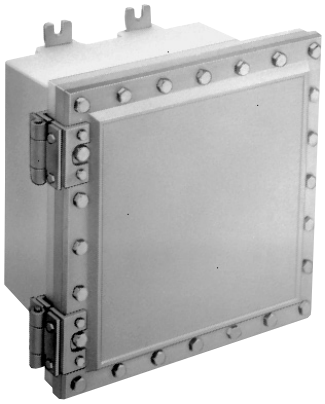

Style C – EJB121208‡ with optional hinged cover

Style D

Cat. #	Nominal Inside Dimensions Sides (aa)	Top & Bottom (bb)	Depth
Iron			
EJB060404✓	4	6	4
EJB080604✓	6	8	4
EJB080606✓	6	8	6
EJB080806✓	8	8	6
EJB120804✓	8	12	4
EJB160404	4	16	4
Aluminum			
EJB060404-SA✓	4	6	4
EJB080604-SA	6	8	4
EJB080606-SA✓	6	8	6
EJB080806-SA	8	8	6
EJB120604-SA	6	12	4
EJB120804-SA✓	8	12	4
EJB120808-SA	8	12	8
EJB160404-SA	4	16	4
EJB101008-SA✓	10	10	8
EJB141006-SA✓	10	14	6

Style C

Cat. #	Nominal Inside Dimensions Sides (aa)	Top & Bottom (bb)	Depth
EJB100806	10	8	6
EJB121204	12	12	4
EJB121206✓	12	12	6
EJB121208✓	12	12	8
EJB161606✓	16	16	6
EJB161608✓	16	16	8
EJB181206	12	18	6
EJB181208	12	18	8
EJB241208	12	24	8
EJB241210	12	24	10
EJB241808✓	18	24	8
EJB242408	24	24	8
EJB242410	24	24	10
EJB361208	12	36	8
EJB361808	18	36	8
EJB362408	24	36	8
EJB602212†	60	22	12

Ordering Information:

Junction boxes listed can be furnished with drilled and tapped openings, subject to material required and the limitations of maximum size and number of openings as well as spacing, as shown in Tables 1 and 2.

To Order:

Step 1
Select the box required from photos at left, listings, and dimensional drawings on pages 130 to 132.
Step 2
Select standard conduit arrangement from Table 1 and maximum size conduit opening required from Table 2.
Step 3
Select appropriate symbol for required drilled and tapped opening from Table 3.
Example:
Step 1 – Box required – EJB080806
Step 2 – Arrangement – 2
Step 3 – Openings – two 1″ drilled and tapped holes in top and bottom and two 2″ drilled and tapped holes on each side.
Step 4 – Symbols are substituted and written in clockwise order starting with ‘‘a.’’ When no opening is required at a particular location, use symbol ‘‘0’’ (zero).
For this example: CC,GG,CC,GG. Complete Cat. No. is made up of three parts: Part 1 – box number; Part 2 – arrangement number; Part 3 – symbols for conduit openings. For this example:
EJB080806-2-CC-GG-CC-GG
If none of the standard arrangements meet requirements, send a sketch showing junction box number with size and location of each conduit opening desired.

EJB Mounting Plate Kits

(For Field Installation)
Select kit number that matches junction box number.
Example: EJB-MP1410 is used in EJB141006-SA

Cat. # Style C	Cat. # Style D
EJB-MP1008	EJB-MP0604
EJB-MP1212	EJB-MP0806
EJB-MP1616	EJB-MP0808
EJB-MP1812	EJB-MP1206
EJB-MP2412	EJB-MP1208
EJB-MP2418	EJB-MP1604
EJB-MP2424	EJB-MP1010
EJB-MP3612	EJB-MP1410
EJB-MP3618	
EJB-MP3624	

* See Compliances on page 128.
** Order suffix ATEX (Style C only).
† Class I, Div. 1 and 2, Groups C and D only.

NOTE: For conduit liner ordering information, see page 140.
✓ - Available with Lightning Service™. See Section G for complete details.

 Copyright© 2006 Cooper Crouse-Hinds

6F EJB Junction Boxes

Ordering Information
Dimensions Pg. 132

Table 1/Conduit Arrangement Diagrams

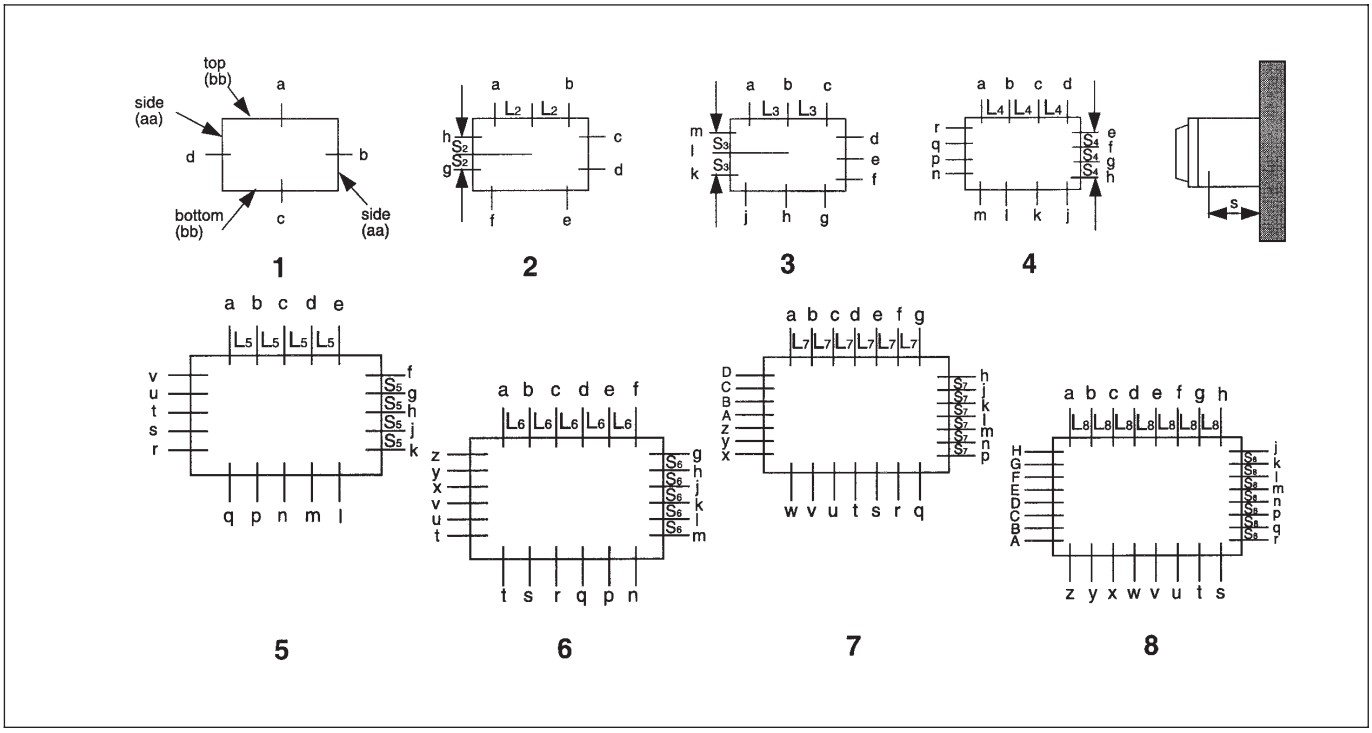

Table 2/Conduit Arrangements – Style D

	Maximum Trade Size and Number of Openings														
	Top and Bottom (bb)*				Sides (aa)				Spacing Dimensions						
Cat. #	1	2	3	4	1	2	3	4	S	L_2	S_2	L_3	S_3	L_4	S_4
EJB060404	2	1¼	½	—	2	½	—	—	2⅝	1⅝	1 1/16	2⅛	—	—	—
EJB080604	2	2	1	½	2	1¼	½	—	2⅝	2⅛	1⅝	2¾	2⅛	2 1/16	—
EJB080606	3½	2	1	½	3½	1¼	½	—	3¾	2¼	1⅝	2¾	2⅛	2 1/16	—
EJB080806	3½	2	1	½	3½	2	1	½	3¾	2¼	2¼	2¾	2¾	2 1/16	2 1/16
EJB101008	4	2½	1½	1	4	2½	1½	1	4¾	2¾	2¾	3⅝	3⅝	2 9/16	2 9/16
EJB120604	2	2	2	1¼	2	1½	½	—	2¾	3	1⅝	4⅛	2⅛	3⅛	—
EJB120804	2	2	2	1¼	2	2	1	½	2⅛	3	2¼	4⅛	2¾	3 1/16	2 1/16
EJB120808	4	4	2	1¼	4	2	1	½	4¾	3¼	2¼	4⅛	2¾	3 1/16	2 1/16
EJB141006	3½	3½	2½	1½	3½	2½	1½	1	3⅞	3¾	2¾	5	3 9/16	3⅝	2 9/16
EJB160404	2	2	2	2	2	½	—	—	2⅝	3	1 1/16	6	—	4⅛	—

NOTE: Conduit seals are required in all conduit entrances for Class I, Division 1, Group B hazardous areas, and for EJB361208, EJB361808, EJB362408, and all Style D enclosures when used in Class I, Division 1, Group C hazardous areas. For other sealing requirements, consult the National Electrical Code*. Where standard arrangements are not adequate, special drilling and tapping can be ordered, or instructions can be provided for field drilling and tapping. Breathers and drains must be ordered separately. Maximum trade size for Group B application is 4″.

* Top and bottom are longer dimensions on enclosures which are not square.

US: 1-866-764-5454 CAN: 1-800-265-0502 Copyright© 2006 Cooper Crouse-Hinds

Ordering Information
Dimensions Pg. 132

Table 2/Conduit Arrangements (Continued)

Style C Drilled and Tapped Openings – Groups B*, C and D**

	Maximum Trade Size and Number of Openings															
	Top and Bottom (bb)**								Sides (aa)							
Cat. #	**1**	**2**	**3**	**4**	**5**	**6**	**7**	**8**	**1**	**2**	**3**	**4**	**5**	**6**	**7**	**8**
EJB100806	3½	3	1½	1¼	—	—	—	—	3½	2½	1½	1¼	—	—	—	—
EJB121204	1½	1½	1½	1¼	1	¾	½	—	1½	1½	1½	1¼	1	¾	½	—
EJB121206	3½	3½	1½	1¼	1	¾	½	—	3½	3½	1½	1¼	1	¾	½	—
EJB121208	5	3½	1½	1¼	1	¾	½	—	5	3½	1½	1¼	1	¾	½	—
EJB161606	3½	3½	2½	2	1½	1¼	1	¾	3½	3½	2½	2	1½	1¼	1	¾
EJB161608	5	5	3	2	1½	1¼	1	¾	5	5	3	2	1½	1¼	1	¾
EJB181206	3½	3½	3½	2½	1½	1½	1	¾	3½	3½	1½	1¼	1	¾	½	—
EJB181208	5	5	3½	2½	2	1½	1	1	5	3½	1½	1¼	1	¾	½	—
EJB241208	5	5	5	3½	3	2½	2	1½	5	3½	1½	1¼	1	1	½	—
EJB241210	6	6	5	3½	3	2½	2	1½	6	3½	1½	1¼	1	1	½	—
EJB241808	5	5	5	3½	3	2½	2	1½	5	5	3½	2½	2	1½	1¼	1
EJB242408	5	5	5	3½	3	2½	2	1½	5	5	5	3½	3	2½	2	1½
EJB242410	6	6	5	3½	3	2½	2	1½	6	6	5	3½	3	2½	2	1½
EJB361208	5	5	5	5	4	4	3½	2½	5	3½	1½	1¼	1	¾	½	—
EJB361808	5	5	5	5	4	4	3½	2½	5	5	3½	2½	2	1½	1¼	1
EJB362408	5	5	5	5	4	4	3½	2½	5	5	5	3½	3	2½	2	1½

Spacing Dimensions ♦ ♦

Cat. #	**S**	**L_2**	**S_2**	**L_3**	**S_3**	**L_4**	**S_4**	**L_5**	**S_5**	**L_6**	**S_6**	**L_7**	**S_7**	**L_8**	**S_8**
EJB100806	3⅜	2¾	1⅞	3	2⅜	2¼	1¾	—	—	—	—	—	—	—	—
EJB121204	3	2¼	2¼	3⅝	3⅝	3 1/16	3 1/16	2	2	1¾	1¾	1½	1½	—	—
EJB121206	3¾	3	3	3⅝	3⅝	3 1/16	3 1/16	2	2	1¾	1¾	1½	1½	—	—
EJB121208	4¾	3	3	3⅝	3⅝	3 1/16	3 1/16	2	2	1¾	1¾	1½	1½	—	—
EJB161606	3¾	3	3	4⅝	4⅝	4 3/16	4 3/16	2¾	2¾	2½	2½	2	2	1¾	1¾
EJB161608	4¾	3¼	3¼	4⅝	4⅝	4 3/16	4 3/16	2¾	2¾	2½	2½	2	2	1¾	1¾
EJB181206	3¾	3	3	6	3⅝	4⅝	3 1/16	2¾	2	2¾	1¾	2	1½	1¾	—
EJB181208	4¾	4 3/16	3	6	3⅝	4⅝	3 1/16	3¼	2	2¾	1¾	2	1½	2	—
EJB241208	5⅛	4 3/16	3	8 7/16	3⅝	6	3 1/16	4⅝	2	3⅞	2	3¼	1½	2¾	—
EJB241210	6⅛	4¾	3	8 7/16	3⅝	6	3 1/16	4⅝	2	3⅞	2	3¼	1½	2¾	—
EJB241808	5¼	4 3/16	4 3/16	8 7/16	6	6	4⅝	4⅝	3¼	3⅞	2¾	3¼	2½	2¾	2
EJB242408	5⅜	4 3/16	4 3/16	8 7/16	8 7/16	6	6	4⅝	4⅝	3⅞	3⅞	3¼	3¼	2¾	2¾
EJB242410	6⅜	4¾	4¾	8 7/16	8 7/16	6	6	4⅝	4⅝	3⅞	3⅞	3¼	3¼	2¾	2¾
EJB361208	4¾	4 7/16	3	8 7/16	3⅝	8 7/16	3 1/16	5¾	2	5¾	1¾	5⅛	1½	3⅞	—
EJB361808	5½	4 7/16	4 7/16	8 7/16	6	8 7/16	4⅝	5¾	3¼	5¾	2¾	5⅛	2½	3⅞	2
EJB362408	6	4¾	4 3/16	8 7/16	8 7/16	8 7/16	6	5¾	4⅝	5¾	3⅞	5⅛	3¼	3⅞	2¾

Table 3 / Symbols for Openings

Conduit Size	Drilled and Tapped Hole Symbol
½	A
¾	B
1	C
1¼	E
1½	F
2	G
2½	H
3	J
3½	K
4	L
5	M
6	N
None	0

NOTE: Conduit seals are required in all conduit entrances for Class I, Division 1, Group B hazardous areas, and for EJB361208, EJB361808 and EJB362408 enclosures when used in Class I, Division 1, Group C hazardous areas. For other sealing requirements, consult the National Electrical Code®. Where standard arrangements are not adequate, special drilling and tapping can be ordered, or instructions can be provided for field drilling and tapping. Breathers and drains must be ordered separately – see page 195.

** Top and bottom are longer dimensions on enclosures which are not square.

♦ ♦ Spacing dimensions for Group B boxes are based on use of EYS11-101 sealing fitting in conduit.

§ Drilled and tapped openings for vertical mounted enclosures with horizontal conduit entries – consult Cooper Crouse-Hinds for proper pouring space for seals.

NOTE: For conduit liner ordering information, see page 140.

*** Maximum trade size for Group B applications is 4″

 Copyright© 2006 Cooper Crouse-Hinds

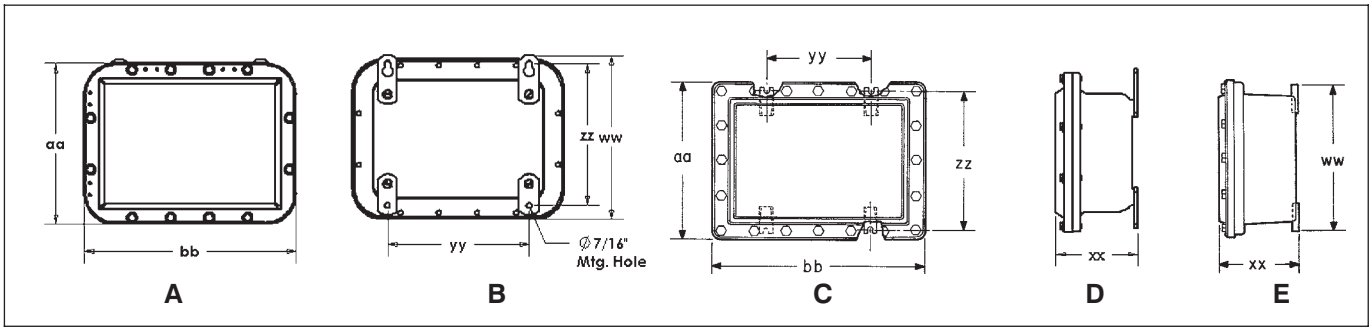

Table 4/Outside Dimensions

Cat. #†	Diagram	aa	bb	Mtg. Hole	ww	xx	yy	Net Weight (lbs.) With Cover zz	w/Cover
EJB060404		8 11/32	10 11/32	7/16	8 3/4	6 1/8	5	7 1/8	43
EJB080604		10 15/32	12 15/32	7/16	10 25/32	6 3/16	7	9 1/8	64
EJB080606		10 15/32	12 15/32	7/16	10 25/32	8 3/16	7	9 1/8	84
EJB080806		12 15/32	12 15/32	7/16	12 25/32	8 7/32	7	11 1/8	98
EJB120804		12 1/2	16 1/2	7/16	12 13/16	6 3/8	11	11 1/8	103
EJB160404		8 1/2	20 1/2	7/16	8 13/16	6 5/32	15	7 1/8	86
EJB060404-SA		8 11/32	10 11/32	7/16	8 3/4	6 1/8	5	7 1/8	16
EJB080604-SA	A,	10 15/32	12 15/32	7/16	10 25/32	6 3/16	7	9 1/8	24
EJB080606-SA	B,	10 15/32	12 15/32	7/16	10 25/32	8 3/16	7	9 1/8	32
EJB080806-SA	D	12 15/32	12 15/32	7/16	12 25/32	8 7/32	7	11 1/8	37
EJB120604-SA		10 1/2	16 1/2	7/16	10 13/16	6 3/16	11	9 1/8	32
EJB120804-SA		12 1/2	16 1/2	7/16	12 13/18	6 3/8	11	11 1/8	39
EJB120808-SA		12 1/2	16 1/2	7/16	12 13/16	10 3/8	11	11 1/8	56
EJB160404-SA		8 1/2	20 1/2	7/16	8 13/16	6 5/32	15	7 1/8	33
EJB101008-SA		14 21/32	14 21/32	7/16	14 7/8	10 3/8	9	13 1/8	59
EJB141006-SA		14 21/32	18 21/32	7/16	14 7/8	8 15/32	13	13 1/8	66
EJB100806		13 1/32	15 1/32	9/16	12 1/4	8 9/16	5 1/2	11 1/4	60
EJB121204		17 1/16	17 1/16	9/16	16 1/8	6 13/16	5 1/2	15 1/8	60
EJB121206		17 1/16	17 1/16	9/16	16 1/8	8 7/8	5 1/2	15 1/8	70
EJB121208		17 1/16	17 1/16	9/16	16 1/8	10 7/8	5 1/2	15 1/8	80
EJB161606		21 3/16	21 3/16	9/16	20 1/8	8 7/8	9 1/2	19 1/8	103
EJB161608		21 3/16	21 3/16	9/16	20 1/8	10 7/8	9 1/2	19 1/8	113
EJB181206	C	17 5/16	23 5/16	9/16	16 1/8	8 7/8	11 1/2	15 1/8	101
EJB181208	and	17 5/16	23 5/16	9/16	16 1/8	10 7/8	11 1/2	15 1/8	110
EJB241208	E	17 9/16	29 9/16	9/16	16 1/8	11 3/4	17 1/2	15 5/8	149
EJB241210		17 9/16	29 9/16	9/16	16 1/8	13 3/4	17 1/2	15 5/8	160
EJB241808		23 9/16	29 5/8	11/16	23 1/2	12 1/4	17 1/4	21 7/8	243
EJB242408		29 9/16	29 9/16	11/16	29 1/2	12 5/16	16 1/4	27 7/8	296
EJB242410		29 9/16	29 9/16	11/16	29 1/2	14 5/16	16 1/4	27 7/8	322
EJB361208		17 1/16	41 1/16	9/16	16 1/8	11 11/16	29 1/2	15 1/8	185
EJB361808		23 15/16	41 15/16	11/16	23 1/2	12 7/16	28 1/4	21 7/8	351
EJB362408		30 3/16	42 3/16	11/16	31 1/4	12 5/8	28 1/4	29 1/2	571

☆ Mounting strap location varies with body. In some cases, they extend beyond the sides.

* See Certifications and Compliances on page 128.

NOTE: For conduit liner ordering information, see page 140.

US: 1-866-764-5454 CAN: 1-800-265-0502 Copyright© 2006 Cooper Crouse-Hinds

Table 5/Mounting Plate Dimensions

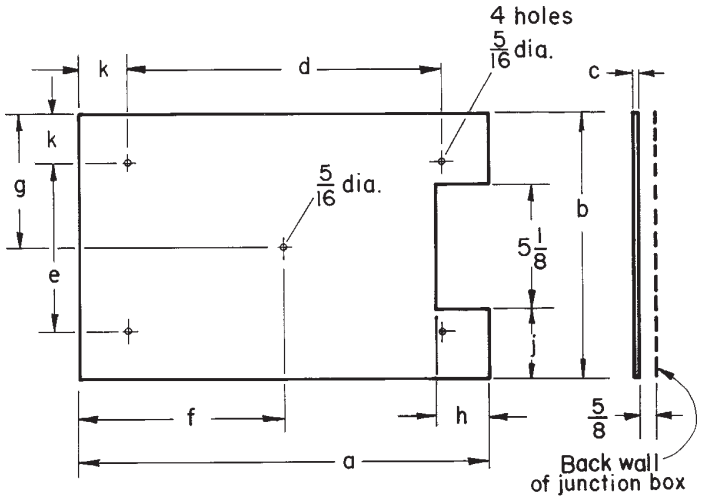

Style C

Style C

Cat. #	a	b	c	d	e	f	g	h	j	k
EJB-MP1008‡	9	7	.125	7	5			1⅜	1½	1
EJB-MP1212‡	11	11	.125	9	9			1⅜	1½	1
EJB-MP1616‡	15	15	.125	13	13			1⅜	1½	1
EJB-MP1812	17	11	.125	13	7	8½	5½	2⅜	2½	2
EJB-MP2412	23	11	.125	19	7	11½	5½	2⅜	2½	2
EJB-MP2418	22	16	.125	19	13	11	8	1⅞	2	1½
EJB-MP2424	22	22	.125	19	19	11	11	1⅞	2	1½
EJB-MP3612	34	10	.125	31	7	17	5	1⅞	2	1½
EJB-MP3618	33½	15½	.125	31	13	16¾	7¾	1⅝	1¾	1¼
EJB-MP3624	34	22	.125	31	19	17	11	1⅞	2	1½

* See Certifications and Compliances on page 128.
‡ Plate has no center hole.

NOTE: For conduit liner ordering information, see page 140.

 Copyright© 2006 Cooper Crouse-Hinds

6F EJB602212 Junction Box

Cl. I, Div. 1 & 2, Groups C,D
Cl. II, Div. 1, Groups E,F,G
Cl. II, Div. 2, Groups F,G
Cl. III
NEMA 3,4,7,9

Explosionproof
Dust-Ignitionproof
Raintight
Wet Locations

Application:

EJB602212 junction box is used in threaded rigid conduit systems in hazardous areas:
- as a junction or pull box.
- as an enclosure for splices and branch circuit taps.
- for housing terminal blocks, relays, and other electrical devices.
- as a mounting box for multi-device control panels with EMP barrel assemblies (see section 4C).
- indoors or outdoors in damp, wet, dusty, corrosive locations.
- where exposure to frequent or heavy rain, water, spray, moisture, and humidity is common; such as: offshore drilling facilities, cooling towers, coal preparation and handling facilities, and sewage and waste water treatment plants.
- which are hazardous due to the presence of gases or vapors such as those found in process industries, missile bases, and gas manufacturing plants.

Features:

- Ground joint cover opening provides maximum opening for pulling wires or mounting equipment.
- Walls of enclosure may be drilled and tapped for conduit entries as shown in Table 2.
- External flange design – wide unobstructed cover opening provides a completely accessible interior for wiring and electrical equipment.
- Square corners of enclosure body provide maximum interior space and area for conduit openings.
- Flat cover provides maximum space for mounting a greater number of control devices.
- Internal grounding lug provides a means to ground enclosed equipment.
- Special neoprene cover gasket provides a watertight seal to meet UL Type 4 (NEMA 4) requirements, and provides superior protection for enclosed equipment against water/corrosion.
- Stainless steel cover bolts provide superior corrosion protection.
- Enclosure is machined for field installed mounting plates.
- Detachable mounting channels provide mounting flexibility. No need to replace enclosure if mounting channel is broken.
- Aluminum hinges provide convenient and easy access for inspection, maintenance, and systems changes.
- Safety chain attached to body and cover prevents accidental damage to hinges.

Standard Materials:

- Body and cover – copper-free aluminum
- Gasket – neoprene
- Cover bolts – stainless steel
- Hinges – extruded aluminum

NOTE: For conduit liner ordering information, see page 140.

Standard Finishes:

- Copper-free aluminum – natural
- Extruded aluminum – natural
- Stainless steel – natural
- Neoprene – natural

Certifications and Compliances:

- NEC:
  Class I, Division 1 & 2, Groups C,D
  Class II, Division 1, Groups E,F,G
  Class II, Division 2, Groups F,G
  Class III
- UL Standard: 886
- UL Raintight
- CSA 22.2 No. 18 and 30
- NEMA 3,4,7CD,9EFG

Options:

Mounting plate kit for field installation (kit includes aluminum mounting plate, pillars, and mounting hardware). EJB-MP6022
Factory installed aluminum mounting plate for relays, terminal blocks, electrical devices, etc. . . . . MP

Ordering Information:

EJB602212 can be furnished with drilled and tapped openings, subject to the limitations of maximum size and number of openings as well as spacing, as shown in Tables 1 and 2.

TO ORDER:

Step 1
Specify box catalog number – EJB602212

Step 2
Select standard conduit arrangement from Table 1 and maximum allowable size conduit opening from Table 2.

Step 3
Select appropriate symbol for required drilled and tapped opening from Table 3.

Example:
Step 1 – Box Cat. No. – EJB602212
Step 2 – Arrangement – 2
Step 3 – Openings – two 2″ drilled and tapped holes in top and bottom and two 2½″ drilled and tapped holes evenly spaced on each side.
Step 4 – Symbols are substituted and written in clockwise order starting with ‘‘a’’. When no opening is required at a particular location, use symbol ‘‘0’’ (zero). For this example: GG-0H0H0-GG-0H0H0. Complete Cat. No. is made up of three parts: Part 1 – box number; Part 2 – arrangement number; Part 3 – symbols for conduit openings. For this example the catalog number is: EJB602212-2-GG-0H0H0-GG-0H0H0.

US: 1-866-764-5454 CAN: 1-800-265-0502 Copyright© 2006 Cooper Crouse-Hinds

EJB602212 Junction Box

Cl. I, Div. 1 & 2, Groups C,D
Cl. II, Div. 1, Groups E,F,G
Cl. II, Div. 2, Groups F,G
Cl. III
NEMA 3,4,7,9
Wet Locations

Explosionproof
Dust-Ignitionproof
Raintight

Table 1 / Conduit Arrangement Diagrams

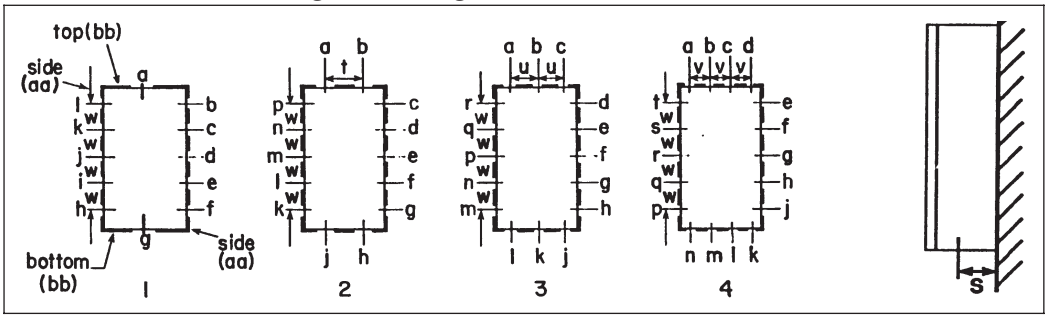

Table 2 / Conduit Arrangements

	MAXIMUM TRADE SIZE AND NUMBER OF OPENINGS									SPACING DIMENSIONS				
	Top and Bottom (bb)				Sides (aa)									
	1	**2**	**3**	**4**	**1**	**2**	**3**	**4**	**5**	**s**	**t**	**u**	**v**	**w**
EJB602212	6	6	4	3	6	6	6	6	6	6¾	10	7	5⅜	10

Table 3 / Symbols for Openings

Conduit Size	Drilled and Tapped Hole Symbol
1/2	A
3/4	B
1	C
1-1/4	E
1-1/2	F
2	G
2-1/2	H
3	J
3-1/2	K
4	L
5	M
6	N
none	0

Note: Conduit sealing fittings are required on all conduit entrances (within 18″ of the enclosure) when used in Class I, Division 1, Group C hazardous areas. For other sealing requirements consult the National Electrical Code.®

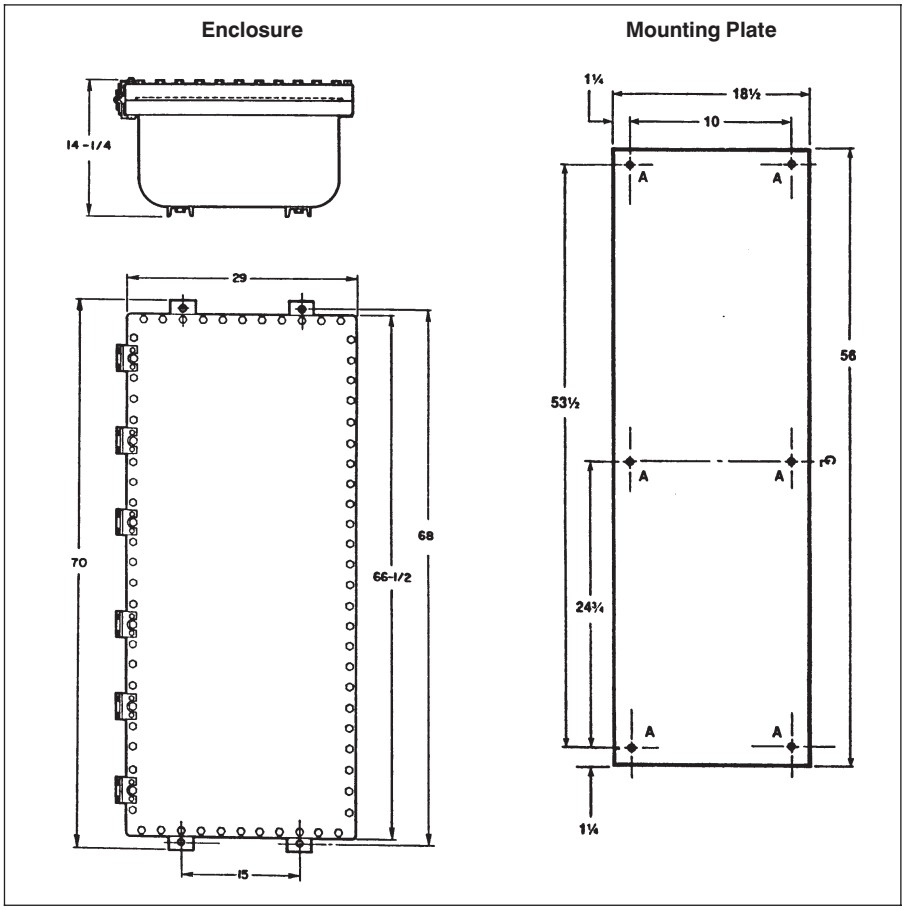

NOMINAL INSIDE DIMENSIONS		
Sides	Top & Bottom	Depth
60	22	12

NOTE: For conduit liner ordering information, see page 140.

 Copyright® 2006 Cooper Crouse-Hinds

6F EJB Custom-Built Control Panels

Using EMP and EMPS Barrel Assemblies

Cl. I, Div. 1 & 2, Groups C,D
Cl. II, Div. 1, Groups E,F,G
Cl. II, Div. 2, Groups F,G
Cl. III
NEMA 3,7CD,9EFG
EEx d IIB+H_2 T6, IP66†

Explosionproof
Dust-Ignitionproof
Raintight
Wet Locations

Application:

EJB custom-built control panels are used with EMP and EMPS barrel assemblies:
- as a means of grouping control stations for centralized process control in hazardous areas in minimum space
- to provide the necessary pushbuttons, pilot lights, selector switches, tumbler switches and glass windows

Features:

- To reduce installation costs, panels can be supplied with control components factory wired to terminal blocks mounted in the box. Relays and other control devices can also be mounted in the boxes for special control functions
- Surface mounted control panels have the components assembled in the hinged cover, readily accessible for circuit checking and trouble shooting
- Panel mounted control assemblies have components installed in the back wall of the junction box. The protruding barrels are passed through holes drilled in the finished panel and locked to the panel in the same manner as individual EMP assemblies. Blank hinged covers are used, and are accessible from the rear of the panel to facilitate maintenance.
- Custom-built control panels to meet your exact requirements are a Cooper Crouse-Hinds specialty. Complete quotations will be supplied for any job, large or small.
- CENELEC certified when ordered with optional suffix ATEX.

Certifications and Compliances:

EJB panels –
- NEC:
  Class I, Division 1 & 2, Groups C,D
  Class II, Division 1, Groups E,F,G
  Class II, Division 2, Groups F,G
  Class III
- NEMA/EEMAC: 3, 7CD, 9EFG
- UL Standard: 698
- CSA Standard: C22.2 No. 30
- CEC:
  Class I, Division 1 & 2, Groups B,C,D
  Class II, Division 1, Groups E,F,G
  Class II, Division 2, Groups F,G
- CENELEC: EEx d IIB + H_2 T6 IP66 † ATEX Certificate: PTB 01 ATEX 1117 (control panels)

EJB surface mounted control panel – cover closed

EJB panel mounted control assembly

Request Brochure # 3331 from your Cooper Crouse-Hinds sales representative or customer service to design your own custom control panel

Dimensions (in inches)*

Listed below are EJB boxes with standard spacing for most barrel assemblies. Depending on the number and type of barrel assemblies installed, closer spacing can be used and more devices assembled.

Standard spacing of barrel assemblies

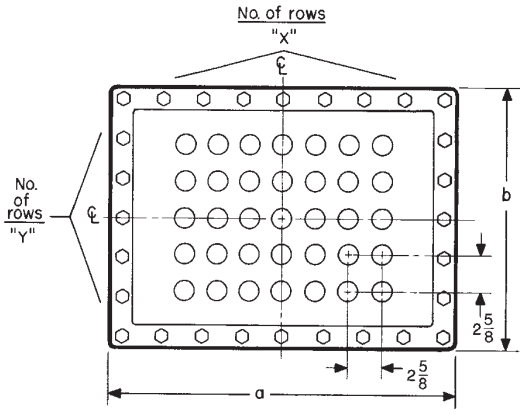

Cat. #	a	b	x	y
EJB100806✓	15 1/32	13 1/32	3	3
EJB121204✓	17 1/16	17 1/16	4	4
EJB121206✓	17 1/16	17 1/16	4	4
EJB121208✓	17 1/16	17 1/16	4	4
EJB161606✓	21 3/16	21 3/16	6	6
EJB161608✓	21 3/16	21 3/16	6	6
EJB181206✓	23 5/16	23 5/16	6	4
EJB181208✓	23 5/16	17 5/16	6	4
EJB241208✓	29 9/16	17 9/16	9	4
EJB241210✓	29 9/16	17 9/16	9	4
EJB241808✓	29 5/8	23 9/16	9	6
EJB241810✓	29 5/8	23 9/16	9	6
EJB242408✓	29 9/16	29 9/16	9	9
EJB242410✓	29 9/16	29 9/16	9	9
EJB361208✓	40 5/16	16 5/16	13	4
EJB361808✓	41 15/16	23 15/16	13	6
EJB361810✓	41 15/16	23 15/16	13	6
EJB362408✓	42 3/16	30 3/16	13	9

Additional dimensional data for EJB is given on page 128.

✓ - Available with Lightning Service™. See Section G for complete details.

* Dimensions are approximate, not for construction purposes.
† Order with suffix ATEX.

NOTE: For conduit liner ordering information, see page 140.

US: 1-866-764-5454 CAN: 1-800-265-0502 Copyright© 2006 Cooper Crouse-Hinds

GUA Junction Boxes with Union Hubs

Cl. I, Div. 1 & 2, Groups C,D
Cl. II, Div. 1, Groups E,F,G
Cl. II, Div. 2, Groups F,G
Cl. III

Explosionproof
Dust-Ignitionproof

Application:

GUA junction boxes with union hubs are used in threaded rigid conduit systems in hazardous areas:

- to allow easy disassembly of conduit system
- to function as junction and pull box for multiple conductors and conduits
- indoors or outdoors where space is limited, such as in gasoline pumps

Features:

- Supplied with union hubs, which makes it a compact assembly.
- Have a variety of hub arrangements.
- Covers are threaded.
- Mounting straps are standard on all boxes.

Standard Materials:

- Bodies – *Feraloy*® iron alloy
- Covers – copper-free aluminum

Standard Finishes:

- *Feraloy* iron alloy – electrogalvanized and aluminum acrylic paint
- Copper-free aluminum – natural

Options:

Description	Suffix to be Added to Cat. #
Feraloy iron alloy cover. . . .	WOD

Size Ranges:

- ½″ to 1″ hubs

Certifications and Compliances:

- NEC/CEC:
  Class I, Division 1 & 2, Groups C,D
  Class II, Division 1, Groups E,F,G
  Class II, Division 2, Groups F,G
  Class III
- UL Standard: 886
- CSA Standard: C22.2 No. 30

With nuts and sleeves*

GUAG

GUAH

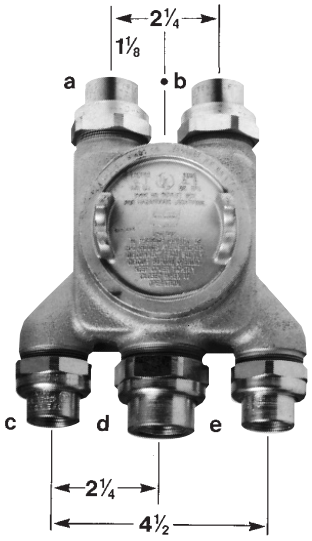

GUAP

Hub Sizes a	b	c	d	e	Cat. # With Nuts and Sleeves*	Dimensions x	y
½	½	½			GUAG6665		
¾	¾	¾			GUAG7775	1⅛	2¼
½	¾	¾			GUAG6775		
¾	½	½			GUAG7665		
¾	1	1			GUAG7885		
¾	1	¾			GUAG7875		
1	¾	¾			GUAG8775	1 3/16	2⅜
1	¾	1			GUAG8785		
1	1	1			GUAG8885		
¾	¾	¾	¾		GUAH77775	See GUAH above	
¾	¾	¾	¾	¾	GUAP777775	See GUAP above	

Outside dimensions of body: length, 3¾″; depth, 1 15/16″ at corners, 3⅛″ over corners; nominal diameter of cover opening, 3″; width, 3¾″.

* Photo shown without standard mounting strap(s).

NOTE: For conduit liner ordering information, see page 140.

 Copyright© 2006 Cooper Crouse-Hinds

6F GUP Junction Boxes

Cl. I, Div. 1 & 2, Groups C,D
Cl. II, Div. 1, Groups E,F,G
Cl. II, Div. 2, Groups F,G
Cl. III

Explosionproof
Dust-Ignitionproof
Raintight

NEW!

Application:

GUP series junction boxes are used in threaded rigid conduit systems in hazardous areas:
- to function as a junction or pull box
- where space is limited such as in gasoline pumps
- indoors or outdoors

Features:

- Compact in design.
- Supplied with a variety of hubs (6 hubs and 3 plugs or 10 hubs and 7 plugs).
- Cover sealed with standard ''O'' ring gasket for raintight enclosure.

Standard Materials:

- Bodies – *Feraloy*® iron alloy
- Covers – copper-free aluminum

Standard Finishes:

- *Feraloy* iron alloy – electrogalvanized and aluminum acrylic paint
- Copper-free aluminum – natural

Options:

Description	Suffix to be Added to Cat. #
Feraloy iron alloy covers	WOD

Certifications and Compliances:

- NEC/CEC:
  Class I, Division 1 & 2, Groups C,D
  Class II, Division 1, Groups E,F,G
  Class II, Division 2, Groups F,G
  Class III
- UL Standard: 886
- CSA Standard C22.2 No. 30

Ordering Information

Top Hubs	Bottom Hubs	Side Hubs	Back Hubs	Catalog #
2–3/4″	2–3/4″	1–3/4″	None	GUP215*
2–3/4″	2–3/4″	1–3/4″	4–3/4″	GUP214**
2–3/4″	2–3/4″	1–3/4″	4–1″	GUP314***

* Furnished with 3–3/4″ pipe plugs.
** Furnished with 7–3/4″ pipe plugs.
*** Furnished with 4–3/4″ pipe plugs and 3-1″ pipe plugs

Dimensions

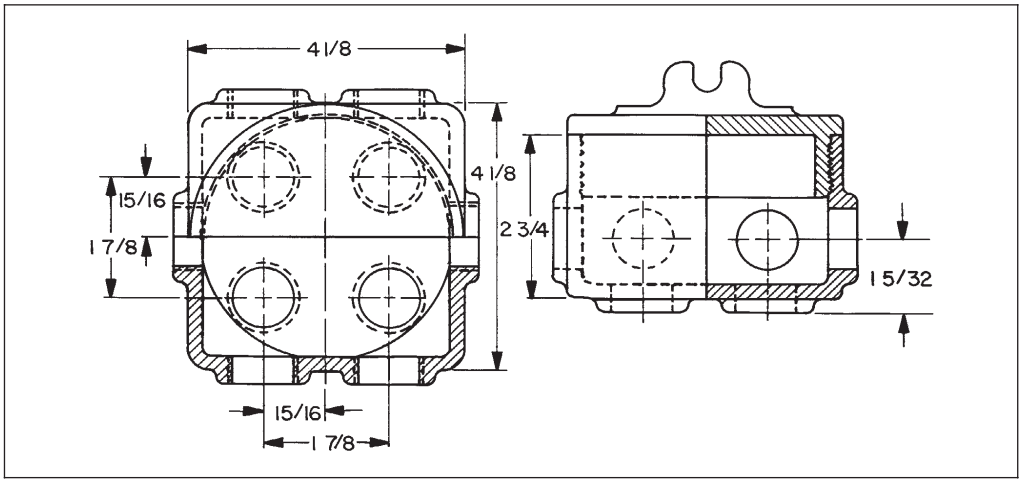

NOTE: For conduit liner ordering information, see page 140.

US: 1-866-764-5454 CAN: 1-800-265-0502 Copyright© 2006 Cooper Crouse-Hinds

EGJ Junction Boxes

Cl. I, Div. 1 & 2, Groups D
Cl. II, Div. 1, Groups E,F,G
Cl. II, Div. 2, Groups F,G
Cl. III

Explosionproof
Dust-Ignitionproof
Raintight

Application:

The EGJ series junction boxes are designed for flush installation in the concrete pump island of gasoline service stations.

Features:

- Cover sealed with ''O'' ring gasket to make unit raintight.
- Cover recess will accept tool used to open cover of gasoline storage tank.
- Two drilled and tapped conduit entrances on the bottom and six on the sides.
- Plugs are provided for the two bottom entrances and four of the side entrances for choice of conduit arrangement.
- ES sealing hubs thread into the bottom to seal the mainfeed.
- Caulking compound supplied for filling space between cover flange and body rim to prevent accumulation of water, dirt and ice. Compound remains pliable and is easily removed.

NOTE: Unused conduit entrances must be securely plugged with type PLG threaded pipe plugs to maintain flametight conditions (see section 7F page 169). See illustration for method of constructing seals.

Standard Materials:

- Bodies – *Feraloy*® iron alloy
- Covers – copper-free aluminum

Standard Finishes:

- *Feraloy* iron alloy – electrogalvanized and aluminum acrylic paint
- Copper-free aluminum – natural

Certifications and Compliances:

- NEC/CEC:
  Class I, Division 1 & 2, Group D
  Class II, Division 1, Groups E,F,G
  Class II, Division 2, Groups F,G
  Class III
- UL Standard: 886
- CSA Standard: C22.2 No. 30

EGJ421

EGJ422

Body Size		Drilled and Tapped Conduit Entrances					Replacement Cover
Length & Width	Depth	No. of Hubs Side	Size	No. of Hubs Back	Size	Cat. #	Cat. #
5¾	4³⁄₁₆	6	¾	2	¾	EGJ421	EGJ:10706L
7	5⁹⁄₃₂	6	¾	2	1	EGJ422	EGJ:10705L

Sealing Hubs (order separately)

For	No.	Female Hub Size	Cat. #
EGJ421	2	1	ES53
EGJ422	2	1¼	ES64

Typical Installation

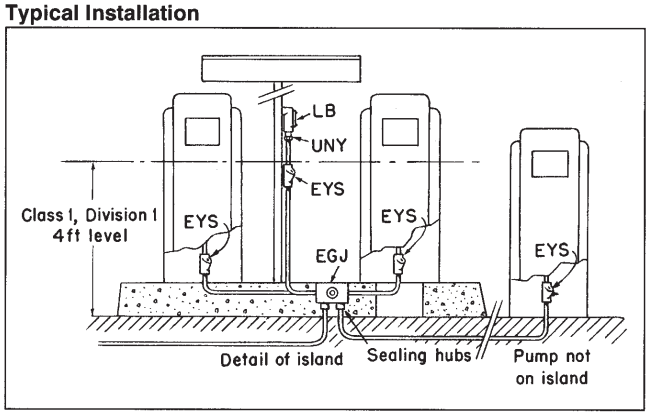

How to construct seal

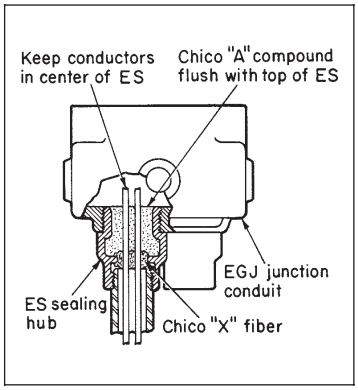

Dimensions

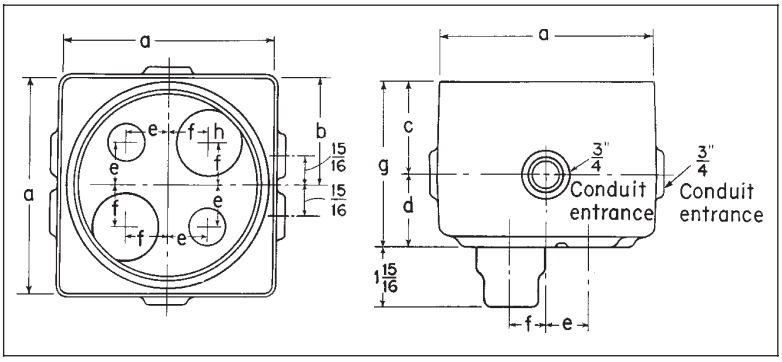

Cat. #	a	b	c	d	e	f	g	h
EGJ421	5¾	2⅞	2⁷⁄₁₆	1¾	1⅛	¹⁵⁄₁₆	4³⁄₁₆	1½″ entry
EGJ422	7	3½	3	2⁹⁄₃₂	1⅜	1⅜	5⁹⁄₃₂	2″ entry

NOTE: For conduit liner ordering information, see page 140.

NOTE: Both the EGJ421 and EGJ422 junction boxes have 4 drilled and tapped conduit entrances in the back (see drawing above). The 2 larger diameter holes are for the ES Sealing Hubs and there are provisions for 2 smaller diameter conduit entrances.

 Copyright® 2006 Cooper Crouse-Hinds

6F LNR Conduit Liner

Application:

LNR conduit liners are installed in rigid metal conduit or IMC:
- to provide a smooth wire entry from conduit into enclosures to protect wires from abrasion as they are pulled.
- with thin wall or thick wall enclosures.
- entering drilled and tapped openings or slip holes.
- entering an enclosure vertically or horizontally.
- regardless of where the conduit ends in relation to the enclosure wall.

Features:

- UL listed and CSA certified.
- No need for threaded bushings, reducers, or special machining.
- Corrosion and heat resistant polypropylene material.
- Smooth flange providing easy wire pulling and protects conductors being installed.
- Space saving.
- Molded ribs ensure a tight fit, preventing the liner from sliding out while conductors are being pulled.
- Quick and easy to install.

Standard Materials:

- Polypropylene

Standard Finishes:

- Natural (clear)

Sizes:

- ½″ through 4″

Certifications and Compliances:

- NEC Article 346-8.
- UL Standard 514B.
- CSA Standard C22.2 No. 18.
- U.S. Patent No. 5,383,688.

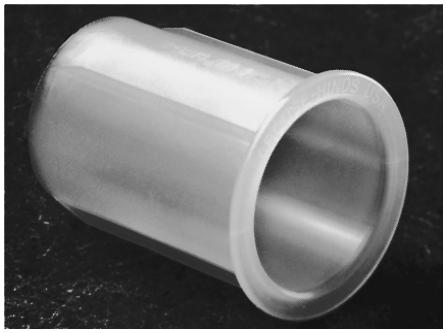

Dimensions:

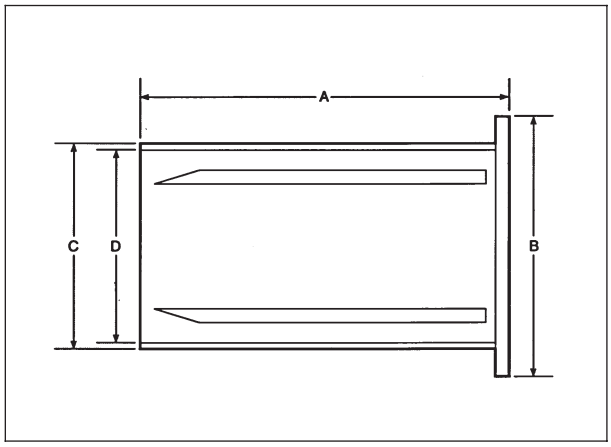

Ordering Information:

Cat. #	Size	A	B	C	D
LNR1	½″	1 3/16″	7/8″	5/8″	9/16″
LNR2	¾″	1 9/16″	1 1/8″	13/16″	¾″
LNR3	1″	2 1/16″	1 3/8″	1 1/16″	7/8″
LNR4	1 1/4″	2 1/16″	1 3/4″	1 3/8″	1 1/4″
LNR5	1 1/2″	2 9/16″	2″	1 5/8″	1 7/16″
LNR6	2″	2 9/16″	2 7/16″	2 1/16″	1 7/8″
LNR7	2 1/2″	2 7/8″	2 7/16″	2 1/4″	
LNR8	3″	2 7/8″	3 9/16″	3 1/16″	2 7/8″
LNR9	3 1/2″	3 1/16″	4 1/16″	3 9/16″	3 3/8″
LNR10	4″	3 1/16″	4 9/16″	4″	3 7/8″

US: 1-866-764-5454 CAN: 1-800-265-0502 Copyright© 2006 Cooper Crouse-Hinds

Ex-CELL Enclosures

Stainless Steel 316L & 304

ATEX II 2 GD Eex e II T6
Certified IP66 to EN60529
cULus to UL50
C22.2 no. 94-M91
Type 3S and 4X

NEW!

Cooper Crouse-Hinds Ex-CELL Enclosures

Cooper Crouse-Hinds Ex-CELL enclosures are manufactured to meet the most demanding industrial and hazardous area environmental applications. Ex-CELL enclosures are available in a comprehensive range of sizes, each with various configurations for a multitude of applications. The Ex-CELL enclosure series is a UL/cUL and ATEX certified enclosure and termination solution for Type 3S, 4X and Zone 1 applications. They are certified to the impact, thermal and IP66 ingress requirements of EN 50014. The Ex-CELL series offers unique design features, precision manufacturing, and the highest quality materials making it the premier choice for instrumentation and electrical applications.

Certifications & Compliances

- ATEX II 2 GD EEx e II T6
- Certified IP66 to EN60529
- cULus to UL50
- C22.2 no. 94-M91
- Type 3S and 4X

Materials & Finishes

Enclosure:	316L (1.4404 to EN 10088) Stainless Steel 304 (1.4301 to EN 10088) Stainless Steel
Finish:	Superior corrosion resistant ''Chromium enriched'' electro-polished surface
Gasket:	High integrity ''one piece'' foam-in-place polyurethane gasket
Keyed Lock Fastening Mechanism:	Chromium plated zinc metal die cast
Door Hardware:	Stainless steel hinges on door
Enclosure Mounting:	4 x external 3mm Stainless Steel welded lugs, 11mm ∅ holes/slots
Equipment Mounting:	4 x stand off pillars 9mm ∅, 25mm high, tapped M6 x10, for rail/ mounting plate
Enclosure Earth:	M10 external & internal brass earth stud assembly
Operating Temp:	-20°C to +60°C
Impact Resistance:	7 J (Nm) to EN 50014

Features

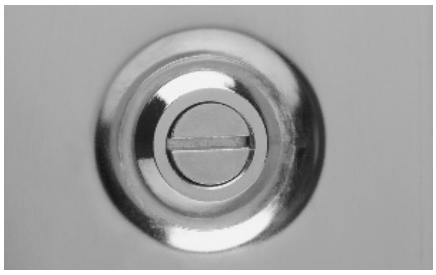

The cover features a ¼ turn slotted lock fastening mechanism that provides a rapid means of achieving a rating of IP66 environmental seal for reliable environmental protection.

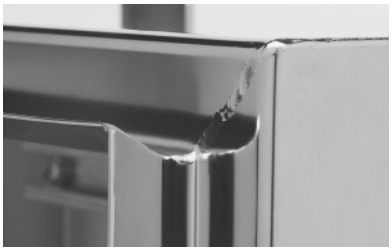

An integral drainage channel prevents liquids or other solid contaminates from running in or falling into the enclosure when the door is opened, and to minimize gasket path contamination.

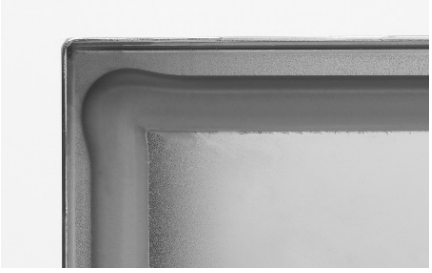

The high integrity ''one piece'' sealing gasket provides an IP 66 rating and excellent recovery and re-sealing properties for continuous environmental protection

The enclosure is mounted by four heavy-duty 3mm thick surface welded and stainless steel lugs, with slotted bottom lugs for ease of mounting. These provide a secure, reliable means of mounting the enclosure.

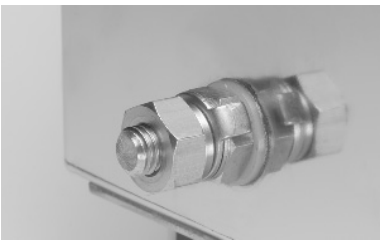

This external & internal brass earth/ground stud assembly enables rapid and reliable protective earth/ground connection, which is mounted on the side of the enclosure for ease of access.

An option for up to 3 gland plates (3mm thick) on each side. Three possible combinations of 0, 1 or 3 gland-plates available. All sealed to IP 66 rating by a high integrity Chloroprene gasket and secured by rapid fixing ''Hytork'' fixing bolts.

 Copyright© 2006 Cooper Crouse-Hinds

6F Ex-CELL Enclosures

Stainless Steel 316L & 304

NEW!

ATEX II 2 GD Eex e II T6
Certified IP66 to EN60529
cULus to UL50
C22.2 no. 94-M91
Type 3S and 4X

Ordering Information - For Enclosures

All enclosures are provided with a keyed lock fastening cover and 1 gland plate. For other configurations see OPTIONS below.

Enclosure Size Outside Dim. (In.) (H x W x D)	Enclosure Size Outside Dim. (mm) (H x W x D)	Description	Enclosure Cat. # with Vertical Mtg Feet	Enclosure Cat. # with Horizontal Mtg Feet
9″ x 6″ x 5″	229 x 152 x 127	316L Stainless Steel Enclosure	XLVS10906051	XLHS12315131
12″ x 8″ x 6″	305 x 203 x 152	316L Stainless Steel Enclosure	XLVS11208061	XLHS13020151
12″ x 12″ x 6″	305 x 305 x 152	316L Stainless Steel Enclosure	XLVS11212061	XLHS13030151
16″ x 12″ x 6″	406 x 305 x 152	316L Stainless Steel Enclosure	XLVS11612061	XLHS14030151
16″ x 12″ x 8″	406 x 305 x 203	316L Stainless Steel Enclosure	XLVS11612081	XLHS14030201
16″ x 16″ x 6″	406 x 406 x 152	316L Stainless Steel Enclosure	XLVS11616061	XLHS14040151
16″ x 16″ x 8″	406 x 406 x 203	316L Stainless Steel Enclosure	XLVS11616081	XLHS14040201
16″ x 20″ x 6″	406 x 508 x 152	316L Stainless Steel Enclosure	XLVS11620061	XLHS14050151
16″ x 20″ x 8″	406 x 508 x 203	316L Stainless Steel Enclosure	XLVS11620081	XLHS14050201
20″ x 16″ x 6″	508 x 406 x 152	316L Stainless Steel Enclosure	XLVS12016061	XLHS15040151
20″ x 16″ x 8″	508 x 406 x 203	316L Stainless Steel Enclosure	XLVS12016081	XLHS15040201
20″ x 20″ x 6″	508 x 508 x 152	316L Stainless Steel Enclosure	XLVS12020061	XLHS15050151
20″ x 20″ x 8″	508 x 508 x 203	316L Stainless Steel Enclosure	XLVS12020081	XLHS15050201
20″ x 24″ x 8″	508 x 610 x 203	316L Stainless Steel Enclosure	XLVS12024081	XLHS15060201
24″ x 16″ x 6″	610 x 406 x 152	316L Stainless Steel Enclosure	XLVS12416061	XLHS16040151
24″ x 16″ x 8″	610 x 406 x 203	316L Stainless Steel Enclosure	XLVS12416081	XLHS16040201
24″ x 20″ x 6″	610 x 508 x 152	316L Stainless Steel Enclosure	XLVS12420061	XLHS16050151
24″ x 20″ x 8″	610 x 508 x 203	316L Stainless Steel Enclosure	XLVS12420081	XLHS16050201
24″ x 24″ x 6″	610 x 610 x 152	316L Stainless Steel Enclosure	XLVS12424061	XLHS16060151
24″ x 24″ x 8″	610 x 610 x 203	316L Stainless Steel Enclosure	XLVS12424081	XLHS16060201
24″ x 30″ x 8″	610 x 762 x 203	316L Stainless Steel Enclosure	XLVS12430081	XLHS16076201
30″ x 20″ x 8″	762 x 508 x 203	316L Stainless Steel Enclosure	XLVS13020081	XLHS17650201
30″ x 24″ x 8″	762 x 610 x 203	316L Stainless Steel Enclosure	XLVS13024081	XLHS17660201
30″ x 30″ x 8″	762 x 762 x 203	316L Stainless Steel Enclosure	XLVS13030081	XLHS17676201

Options

Material - standard enclosure is type 316L stainless steel

- For a 304 Stainless Steel Enclosure... change S1 to S2 in catalog number. ie. XLVS10906051 becomes XLVS20906051

Gland Plate - standard enclosure comes with 1 gland plate

- For no gland plates... change last digit from 1 to 0. ie. XLVS10906051 becomes XLVS10906050
- For 3 gland plates... change last digit from 1 to 3. ie. XLVS10906051 becomes XLVS10906053

Cover Option - standard cover is a hinged cover with "1-Step" Keyed Lock Fastening device on "vertical mount" enclosures and double bit lock insert on "horizontal mount" enclosures.

- For a bolted cover... Add a suffix B at end of catalog number. ie. XLVS10906051 becomes XLVS10906051B

Mounting Plates - Fits both enclosures with vertical or horizontal mounting feet

Enclosure Size (in.)	Enclosure Size (mm)	Catalog #	Enclosure Size (in.)	Enclosure Size (mm)	Catalog #
9″ x 6″ x 5″	229 x 152 x 127	XLHZTMP2315	20″ x 20″ x 8″	508 x 508 x 203	XLHZTMP5050
12″ x 8″ x 6″	305 x 203 x 152	XLHZTMP3020	20″ x 24″ x 8″	508 x 610 x 203	XLHZTMP5060
12″ x 12″ x 6″	305 x 305 x 152	XLHZTMP3030	24″ x 16″ x 6″	610 x 406 x 152	XLHZTMP6040
16″ x 12″ x 6″	406 x 305 x 152	XLHZTMP4030	24″ x 16″ x 8″	610 x 406 x 203	XLHZTMP6040
16″ x 12″ x 8″	406 x 305 x 203	XLHZTMP4030	24″ x 20″ x 6″	610 x 508 x 152	XLHZTMP6050
16″ x 16″ x 6″	406 x 406 x 152	XLHZTMP4040	24″ x 20″ x 8″	610 x 508 x 203	XLHZTMP6050
16″ x 16″ x 8″	406 x 406 x 203	XLHZTMP4040	24″ x 24″ x 6″	610 x 610 x 152	XLHZTMP6060
16″ x 20″ x 6″	406 x 508 x 152	XLHZTMP4050	24″ x 24″ x 8″	610 x 610 x 203	XLHZTMP6060
16″ x 20″ x 8″	406 x 508 x 203	XLHZTMP4050	24″ x 30″ x 8″	610 x 762 x 203	XLHZTMP6076
20″ x 16″ x 6″	508 x 406 x 152	XLHZTMP5040	30″ x 20″ x 8″	762 x 508 x 203	XLHZTMP7650
20″ x 16″ x 8″	508 x 406 x 203	XLHZTMP5040	30″ x 24″ x 8″	762 x 610 x 203	XLHZTMP7660
20″ x 20″ x 6″	508 x 508 x 152	XLHZTMP5050	30″ x 30″ x 8″	762 x 762 x 203	XLHZTMP7676

US: 1-866-764-5454 CAN: 1-800-265-0502 Copyright© 2006 Cooper Crouse-Hinds

Ex-CELL Enclosures

Stainless Steel 316L & 304

ATEX II 2 GD Eex e II T6
Certified IP66 to EN60529
cULus to UL50
C22.2 no. 94-M91
Type 3S and 4X

DIMENSIONS
Vertical Mounting

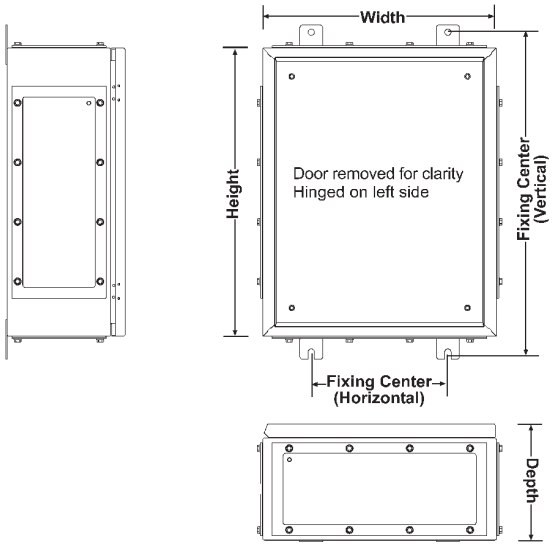

DIMENSIONS
Horizontal Mounting

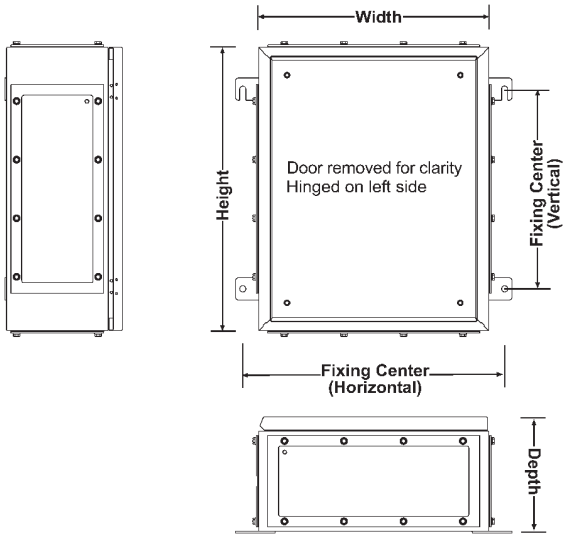

DIMENSIONS

Enclosures with vertical mtg feet	Enclosure Size Outside Dim. (In.) (H x W x D)	Mtg Hole Vertical (in.)	(Fixture Ctr.) Horizontal (in.)	Enclosures with horizontal mtg feet	Enclosures Size Outside Dim. (mm) (H x W x D)	Mtg Hole Vertical (mm)	(Fixture Ctr.) Horizontal (mm)
XLVS10906051	9″ x 6″ x 5″	10.24	3.5	XLHS12315131	229 x 152 x 127	152	208
XLVS11208061	12″ x 8″ x 6″	13.24	5.5	XLHS13020151	305 x 203 x 152	203	259
XLVS11212061	12″ x 12″ x 6″	13.24	9.5	XLHS13030151	305 x 305 x 152	203	361
XLVS11612061	16″ x 12″ x 6″	17.24	9.5	XLHS14030151	406 x 305 x 152	267	361
XLVS11612081	16″ x 12″ x 8″	17.24	9.5	XLHS14030201	406 x 305 x 203	267	361
XLVS11616061	16″ x 16″ x 6″	17.24	10	XLHS14040151	406 x 406 x 152	267	462
XLVS11616081	16″ x 16″ x 8″	17.24	10	XLHS14040201	406 x 406 x 203	267	462
XLVS11620061	16″ x 20″ x 6″	17.24	14	XLHS14050151	406 x 508 x 152	267	564
XLVS11620081	16″ x 20″ x 8″	17.24	14	XLHS14050201	406 x 508 x 203	267	564
XLVS12016061	20″ x 16″ x 6″	21.24	10	XLHS15040151	508 x 406 x 152	354	462
XLVS12016081	20″ x 16″ x 8″	21.24	10	XLHS15040201	508 x 406 x 203	354	462
XLVS12020061	20″ x 20″ x 6″	21.24	14	XLHS15050151	508 x 508 x 152	354	564
XLVS12020081	20″ x 20″ x 8″	21.24	14	XLHS15050201	508 x 508 x 203	354	564
XLVS12024081	20″ x 24″ x 8″	21.24	18	XLHS15060201	508 x 610 x 203	354	666
XLVS12416061	24″ x 16″ x 6″	25.24	10	XLHS16040151	610 x 406 x 152	445	462
XLVS12416081	24″ x 16″ x 8″	25.24	10	XLHS16040201	610 x 406 x 203	445	462
XLVS12420061	24″ x 20″ x 6″	25.24	14	XLHS16050151	610 x 508 x 152	445	564
XLVS12420081	24″ x 20″ x 8″	25.24	14	XLHS16050201	610 x 508 x 203	445	564
XLVS12424061	24″ x 24″ x 6″	25.24	18	XLHS16060151	610 x 610 x 152	445	666
XLVS12424081	24″ x 24″ x 8″	25.24	18	XLHS16060201	610 x 610 x 203	445	666
XLVS12430081	24″ x 30″ x 8″	25.24	24	XLHS16076201	610 x 762 x 203	445	818
XLVS13020081	30″ x 20″ x 8″	31.24	14	XLHS17650201	762 x 508 x 203	508	564
XLVS13024081	30″ x 24″ x 8″	31.24	18	XLHS17660201	762 x 610 x 203	508	666
XLVS13030081	30″ x 30″ x 8″	31.24	24	XLHS17676201	762 x 762 x 203	508	818

 Copyright© 2006 Cooper Crouse-Hinds

6F NexT Series Junction Boxes

Sheet or Stainless Steel Hinged Cover

IP66
EEx e II
EEx ia IIC
EEx e ia IIC

NexT Series

Features/Applications:

The NexT series of enclosures available in two types of material finish have been designed to accommodate rail mounted terminals or other electrical components. Stainless steel is recommended to give maximum protection for components in outdoor/ aggressive environments.

Features of this series included thirteen basic sizes in two standard depths to optimize the accomodation of rail-mountable terminals or components.

- Fully removable hinged cover, concealed hinges provide 180° opening
- Cover mounting, two or three stainless steel captive screws on one side.
- Lip on upstand increases gasket contact area, ensuring high degree of ingress protection.
- Internal/external ground stud.
- 40mm wide mounting lugs for assembly on standard frames.
- Option of 0, 1, 2, 3 or 4 gland plates
- One piece gasket on cover and gland plates.
- Padlock hasp available optional.

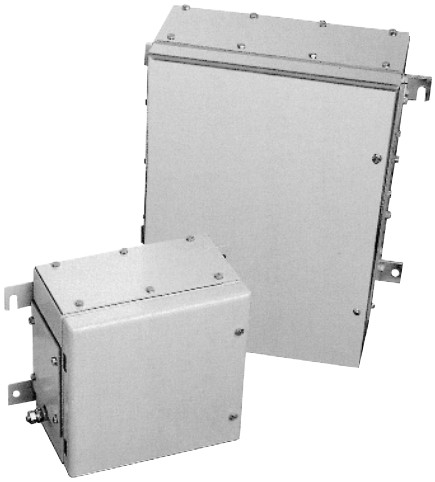

Specifications:

Material	NXT 2215-5035 NXT 6245-9874 Gland plate	0.059″ sheet steel or 316L stainless steel 0.080″ sheet steel or 316L stainless steel 0.128″ sheet steel or 316L stainless steel
Finish	Painted 316L Stainless steel	RAL 7032 (Textured) Bright Chemical Dip (polished appearance)
Gasket	All types	Neoprene (standard)
Cover Mounting	All types	Fully detachable hinged cover with 2 or 3 x M6 hexagon head captive stainless steel screws
Grounding	All types	M10 internal/external ground stud
Box Mounting	All types	4 x external lugs, 0.394″ clearance holes/slots
Equipment Mounting	All types	4 x stand off pillars 0.394″ OD, tapped M6 x 0.394″
Ingress Protection	All types	IP66 to IEC529
Temperature Range	RA104 HT800	-49°F to 203°F -85°F to 275°F
Ambient Temperature	RA104 Gaskets HT800	-49°F to 104°F T6 -49°F to 131°F T5 -85°F to 104°F T6 -85°F to 131°F T5
Impact Resistance	All types	7 J (Nm) to EN 50014
Deluge Test	All types	Spec. No. DTS 01

Factory Options (Consult Factory):

Material	Special materials or thickness according to customer specification
Finish	Special colors according to customer specification
Sizes	Special sizes according to customer specification
Equipment	Terminals, glands, and Myers Hubs assembled according to customer specification
Gland plates	Drilled cable glands fitted to customer specification
Ground Studs	Also available fitted to gland plates and cover
EMC	Versions for maximum shielding from EMI/RFI, 0 gland plate only
Cover Attachments	e.g. Handles

Certifications and Compliances:

c UL us LISTED

UL50/C22.2 N094-M91 mild steel: Types 3S, 4; stainless steel: Type 4X.

CSA – selected sizes only
Germanischer Lloyd (GL)

ATEX 1. Component Certificate KEMA99ATEX3174 U

Codes		
	II 2 G	EEx e II
	II 2 D	≥ IP64

ATEX 2. Certificate of Conformity KEMA99ATEX3172X

Codes		
	II 2 G	EEx e II T6 or T5
	II 2 D	T100°C ≥ IP64
	II 1 G	EEx ia IIC T6 or T5
	II 2 D	T100°C ≥ IP64
	II 2 (1) G	EEx e ia IIC T6 or T5
	II 2 D	T100°C ≥ IP64

US: 1-866-764-5454 CAN: 1-800-265-0502 Copyright© 2006 Cooper Crouse-Hinds

NexT Series

Sheet or Stainless Steel Hinged Cover

IP66
EEx e II
EEx ia IIC
EEx e ia IIC

Top	A
Bottom	B
Left hand side	C
Right hand side	D

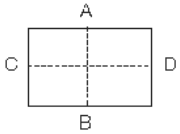

	NXT 221513	NXT 262616	NXT 262620	NXT 303016
Height	9.02″	10.23″	10.23″	12.05″
Width	5.98″	10.23″	10.23″	12.05″
Depth	5.31″	6.30″	8.07″	6.30″
Weight	7.17 lb	12.13 lb	12.13 lb	15.43 lb
Gland Plate A/B	3.54/5.51″	4.72/10″	6.46/10″	4.33/11.42″
Gland Plate C/D	3.54/5.51″	4.72/6.06″	6.46/6.06″	4.33/7.48″

Ordering Data:

		Cat. No.	Cat. No.	Cat. No.	Cat. No.
0 Gland Plates	**Paint Finish**	NXTPS2215130	NXTPS2626160	NXTPS2626200	NXTPS3030160
	Stainless Steel Finish	NXTS12215130	NXTS12626160	NXTS12626200	NXTS13030160
1 Gland Plate Side B (Bottom)	**Paint Finish**	NXTPS2215131	NXTPS2626161	NXTPS2626201	NXTPS3030161
	Stainless Steel Finish	NXTS12215131	NXTS12626161	NXTS12626201	NXTS13030161
2 Gland Plates Sides A + B (Top and Bottom)	**Paint Finish**	NXTPS2215132	NXTPS2626162	NXTPS2626202	NXTPS3030162
	Stainless Steel Finish	NXTS12215132	NXTS12626162	NXTS12626202	NXTS13030162
3 Gland Plates Sides B, C + D (Bottom and Sides)	**Paint Finish**	NXTPS2215133	NXTPS2626163	NXTPS2626203	NXTPS3030163
	Stainless Steel Finish	NXTS12215133	NXTS12626163	NXTS12626203	NXTS13030163
4 Gland Plates Sides A, B, C + D (All Sides)	**Paint Finish**	NXTPS2215134	NXTPS2626164	NXTPS2626204	NXTPS3030164
	Stainless Steel Finish	NXTS12215134	NXTS12626164	NXTS12626204	NXTS13030164

Gland Sizes (mm) Per Plate (Reference Only)

		Top/Bottom	Left/Right	Top/Bottom	Left/Right	Top/Bottom	Left/Right	Top/Bottom	Left	Right
Brass Glands	**M16**	6	6	20	9	33	18	26	20	26
Brass Glands	**M20**	3	3	10	6	15	9	14	10	14
Brass Glands	**M25**	2	2	6	3	12	5	8	8	8
Brass Glands	**M32**	1	1	3	2	6	4	4	3	4
Brass Glands	**M40**	1	1	3	1	5	2	3	3	3
Brass Glands	**M50**	1	1	2	1	3	1	3	2	3

Top	A
Bottom	B
Left hand side	C
Right hand side	D

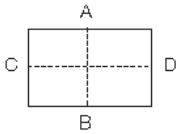

	NXT 303020	NXT 382616	NXT 382620	NXT 453820
Height	12.05″	14.96″	14.96″	18.031″
Width	12.05″	10.24″	10.24″	15.039″
Depth	8.07″	6.29″	8.07″	8.071″
Weight	15.43 lb	15.43 lb	15.43 lb	21.45 lb
Gland Plate A/B	4.33/11.42″	4.72/10″	6.46/10″	4.33/14.57″
Gland Plate C/D	4.33/7.48″	4.72/10″	6.46/10″	4.33/14.57″

Ordering Data:

		Cat. No.	Cat. No.	Cat. No.	Cat. No.
0 Gland Plates	**Paint Finish**	NXTPS3030200	NXTPS3826160	NXTPS3826200	NXTPS4538200
	Stainless Steel Finish	NXTS13030200	NXTS13826160	NXTS13826200	NXTS14538200
1 Gland Plate Side B (Bottom)	**Paint Finish**	NXTPS3030201	NXTPS3826161	NXTPS3826201	NXTPS4538201
	Stainless Steel Finish	NXTS13030201	NXTS13826161	NXTS13826201	NXTS14538201
2 Gland Plates Sides A + B Top and Bottom	**Paint Finish**	NXTPS3030202	NXTPS3826162	NXTPS3826202	NXTPS4538202
	Stainless Steel Finish	NXTS13030202	NXTS13826162	NXTS13826202	NXTS14538202
3 Gland Plates Sides B, C + D (Bottom and Sides)	**Paint Finish**	NXTPS3030203	NXTPS3826163	NXTPS3826203	NXTPS4538203
	Stainless Steel Finish	NXTS13030203	NXTS13826163	NXTS13826203	NXTS14538203
4 Gland Plates Sides A, B, C + D (All Sides)	**Paint Finish**	NXTPS3030204	NXTPS3826164	NXTPS3826204	NXTPS4538204
	Stainless Steel Finish	NXTS13030204	NXTS13826164	NXTS13826204	NXTS14538204

Gland Sizes (mm) Per Plate (Reference Only)

		Top/Bottom	Left	Right	Top/Bottom	Left/Right	Top/Bottom	Left/Right	Top/Bottom	Left/Right
Brass Glands	**M16**	32	38	32	20	20	33	33	44	44
Brass Glands	**M20**	18	15	18	10	10	15	15	24	24
Brass Glands	**M25**	15	12	15	6	6	12	12	20	20
Brass Glands	**M32**	8	6	8	3	3	6	6	10	10
Brass Glands	**M40**	6	5	6	3	3	5	5	8	8
Brass Glands	**M50**	3	3	3	2	2	3	3	4	4

 Copyright© 2006 Cooper Crouse-Hinds

6F NexT Series

Sheet or Stainless Steel Hinged Cover

IP66
EEx e II
EEx ia IIC
EEx e ia IIC

Top	A
Bottom	B
Left hand side	C
Right hand side	D

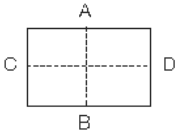

	NXT 484820	NXT 503520	NXT 624520	NXT 745520
Height	18.898″	19.685″	24.41″	29.13″
Width	18.898″	13.78″	17.72″	17.72″
Depth	8.071″	8.071″	8.07″	8.07″
Weight	22.88 lb	23.1 lb	37.48 lb	37.48 lb
Gland Plate A/B	4.33/14.57″	6.46/13.54″	6.46/17.48″	6.46/17.48″
Gland Plate C/D	4.33/14.57″	6.46/13.54″	6.46/17.48″	6.46/17.48″

Ordering Data:

		Cat. No.	Cat. No.	Cat. No.	Cat. No.
0 Gland Plates	**Paint Finish**	NXTPS4848200	NXTPS5035200	NXTPS6245200	NXTPS7455200
	Stainless Steel Finish	NXTS14848200	NXTS15035200	NXTS16245200	NXTS17455200
1 Gland Plate Side B (Bottom)	**Paint Finish**	NXTPS4848201	NXTPS5035201	NXTPS6245201	NXTPS7455201
	Stainless Steel Finish	NXTS14848201	NXTS15035201	NXTS16245201	NXTS17455201
2 Gland Plates Sides A + B (Top and Bottom)	**Paint Finish**	NXTPS4848202	NXTPS5035202	NXTPS6245202	NXTPS7455202
	Stainless Steel Finish	NXTS14848202	NXTS15035202	NXTS16245202	NXTS17455202
3 Gland Plates Sides B, C + D (Bottom and Sides)	**Paint Finish**	NXTPS4848203	NXTPS5035203	NXTPS6245203	NXTPS7455203
	Stainless Steel Finish	NXTS14848203	NXTS15035203	NXTS16245203	NXTS17455203
4 Gland Plates Sides A, B, C + D (All Sides)	**Paint Finish**	NXTPS4848204	NXTPS5035204	NXTPS6345204	NXTPS7455204
	Stainless Steel Finish	NXTS14848204	NXTS15035204	NXTS16245204	NXTS17455204

Gland Sizes (mm) Per Plate (Reference Only)

		Top/Bottom	Left	Right	Top/Bottom	Left/Right	Top/Bottom	Left/Right	Top/Bottom	Left/Right
Brass Glands	**M16**	53	44	53	40	40	53	53	60	60
Brass Glands	**M20**	30	24	30	24	24	30	30	39	39
Brass Glands	**M25**	24	20	24	18	18	24	24	30	30
Brass Glands	**M32**	14	10	14	10	10	14	14	18	18
Brass Glands	**M40**	11	8	11	7	7	11	11	13	13
Brass Glands	**M50**	5	4	5	4	4	5	5	6	6

Top	A
Bottom	B
Left hand side	C
Right hand side	D

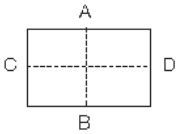

	NXT 765020	NXT 866420	NXT 916120	NXT 987420
Height	30″	33.86″	35.99″	38.58″
Width	20″	25.20″	24.02″	29.13″
Depth	8.07″	8.07″	8.07″	8.07″
Weight	51.81 lb	63.93 lb	68.34 lb	83.76 lb
Gland Plate A/B	4.33/19.69″	6.46/24.96″	5.512/23.62″	6.46/13.54″
Gland Plate C/D	4.33/19.69″	6.46/24.96″	5.512/23.62″	2x6.46/17.48″

Ordering Data:

		Cat. No.	Cat. No.	Cat. No.	Cat. No.
0 Gland Plates	**Paint Finish**	NXTPS7650200	NXTPS8664200	NXTPS9161200	NXTPS9874200
	Stainless Steel Finish	NXTS17650200	NXTS18664200	NXTS19161200	NXTS19874200
1 Gland Plate Side B (Bottom)	**Paint Finish**	NXTPS7650201	NXTPS8664201	NXTPS9161201	NXTPS9874201
	Stainless Steel Finish	NXTS17650201	NXTS18664201	NXTS19161201	NXTS19874201
2 Gland Plates Sides A + B Top and Bottom	**Paint Finish**	NXTPS7650202	NXTPS8664202	NXTPS9161202	NXTPS9874202
	Stainless Steel Finish	NXTS17650202	NXTS18664202	NXTS19161202	NXTS19874202
3 Gland Plates Sides B, C + D (Bottom and Sides)	**Paint Finish**	NXTPS7650203	NXTPS8664203	NXTPS9161203	NXTPS9874203
	Stainless Steel Finish	NXTS17650203	NXTS18664203	NXTS19161203	NXTS19874203
4 Gland Plates Sides A, B, C + D (All Sides)	**Paint Finish**	NXTPS7650204	NXTS18664214	NXTPS9161204	NXTPS9874204
	Stainless Steel Finish	NXTS17650204	NXTS18664204	NXTS19161204	NXTS19874204

Gland Sizes (mm) Per Plate (Reference Only)

		Top/Bottom	Left/Right	Top/Bottom	Left/Right	Top/Bottom	Left/Right	Top/Bottom	Left/Right
Brass Glands	**M16**	53	72	72	40	72	72	40	53
Brass Glands	**M20**	30	45	45	24	42	42	24	30
Brass Glands	**M25**	24	35	35	18	24	24	18	24
Brass Glands	**M32**	14	20	20	10	18	18	10	14
Brass Glands	**M40**	11	13	13	7	8	8	7	11
Brass Glands	**M50**	5	7	7	4	7	7	4	5

US: 1-866-764-5454 CAN: 1-800-265-0502 Copyright© 2006 Cooper Crouse-Hinds

Accessories

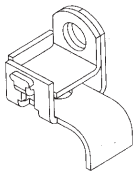

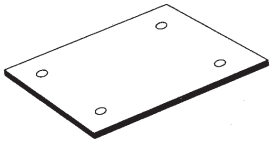

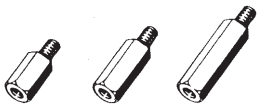

Mounting Plates:

Material: Tufnol, zinc coated or stainless steel

Enclosure Size	Tufnol Cat. No.	Zinc Coated Steel Cat. No.	Stainless Steel Cat. No.
NXT2215	NXTTLMP2215	NXTZTMP2215	NXTS1MP2215
NXT2626	NXTTLMP2626	NXTZTMP2626	NXTS1MP2626
NXT3030	NXTTLMP3030	NXTZTMP3030	NXTS1MP3030
NXT3826	NXTTLMP3826	NXTZTMP3826	NXTS1MP3826
NXT4538	NXTTLMP4538	NXTZTMP4538	NXTS1MP4538
NXT4848	NXTTLMP4848	NXTZTMP4848	NXTS1MP4848
NXT5035	NXTTLMP5035	NXTZTMP5035	NXTS1MP5035
NXT6245	NXTTLMP6245	NXTZTMP6245	NXTS1MP6245
NXT7455	NXTTLMP7455	NXTZTMP7455	NXTS1MP7455
NXT7650	NXTTLMP7650	NXTZTMP7650	NXTS1MP7650
NXT8664	NXTTLMP8664	NXTZTMP8664	NXTS1MP8664
NXT9161	NXTTLMP9161	NXTZTMP9161	NXTS1MP9161
NXT9874	NXTTLMP9874	NXTZTMP9874	NXTS1MP9874

Stand-off Pillars

Type	Inches	Cat. No.
SP15	0.60	ACCSOP15
SP20	0.80	ACCSOP20
SP30	1.20	ACCSOP30

Lock:

Type	Cat. No.
NP6 Brass Lock and 2 Keys	NXTNP6BL2K

Hasp:

Type	Cat. No.
NPA6	NXTNPAHASP

Stainless Steel, for Type NP6 Padlocks
Mount on Enclosure by Removing Cover Screw and Fitting Hasp Between Cover and Screw.

Assembly Rail:

Type		Cat. No.
TS35	78.74″ length	ACCTS352M
TAS20	78.74″ length	ACCTAS202M

Ground Stud Kits:

Type	Cat. No.
M10 Brass	ACCBSESM10KIT
M10 Stainless Steel	ACCS1ESM10KIT
M14 Brass	ACCBSESM14KIT

 Copyright© 2006 Cooper Crouse-Hinds

6F NexT Series

Sheet or Stainless Steel Hinged Cover Dimensions

IP66
EEx e II
EEx ia IIC
EEx e ia IIC

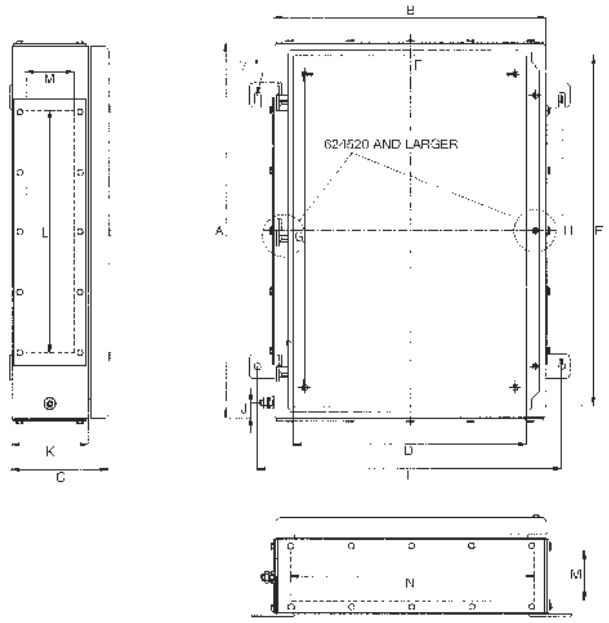

NexT Enclosure Series Dimensions (in inches):

Dimensions:

Code	Type	A	B	C	D	E	F	G	H	I	J	K	L	M	N
NXT*	221513**	9.02	5.98	5.12	3.50	7.48	2.05	5**	5.98	8.19	0.98	4.01	4.25	2.28	4.25
NXT	262616 (262620)	10.24	10.24	6.30 (8.08)	7.76	8.70	6.30	6.30	6.69	12.44	0.98	4.96 (6.77)	4.49	3.15 (4.88)	8.43
NXT*	303016 (303020)	12.04	12.05	6.30 (8.08)	9.57	10.51	8.11	8.11	7.99	14.21	0.98	4.96 (6.77)	Left 8.43 Right 10.28	3.15 (4.88)	10.28
NXT	382616 (382620)	14.97	10.24	6.30 (8.08)	7.76	13.43	6.30	11.02	9.84	12.44	0.98	4.96 (6.77)	8.43	3.15 (4.88)	8.43
NXT*	453820	18.01	15.04	8.08	12.56	16.50	11.10	14.09	12.00	17.21	0.98	6.77	13.27	4.88	13.27
NXT*	484820	18.90	18.90	8.08	16.42	17.36	14.96	14.96	12.87	21.06	0.98	6.77	Left 13.27 Right 15.91	4.88	15.91
NXT	503520	19.69	13.79	8.08	11.30	18.15	9.84	15.75	13.78	15.98	0.98	6.77	11.97	4.88	11.97
NXT	624520	24.41	17.72	8.08	15.24	22.87	13.78	20.47	17.72	19.92	0.98	6.77	15.91	4.88	15.91
NXT	745520	29.13	21.66	8.08	19.18	27.60	17.72	25.18	21.26	23.86	0.98	6.77	19.84	4.88	19.84
NXT*	765020	30.00	20.00	8.08	17.52	28.47	16.06	26.06	20.00	22.21	0.98	6.77	23.39	4.25	18.27
NXT	866420	33.86	25.20	8.08	22.72	32.32	21.26	29.92	22.44	27.40	0.98	6.77	2 x 11.97	4.88	23.39
NXT*	916120	35.98	24.02	8.08	21.54	34.45	20.08	32.05	22.00	26.22	0.98	6.77	22.32	4.25	22.28
NXT	987420	38.58	29.13	8.08	26.65	37.05	25.20	34.65	27.56	31.34	0.98	6.77	2 x 15.91	4.88	2 x 11.97

*Note: Subtract 1.18″ from dimension ‘I’ for mounting center when side gland plates are not used.
**Note: NXT 221513 has two stand off pillars only, mounted on the center line.

US: 1-866-764-5454 CAN: 1-800-265-0502 Copyright© 2006 Cooper Crouse-Hinds

STB Series Junction Boxes

Sheet or Stainless Steel

IP66
EEx e II
EEx ia IIC
EEx e ia IIC

STB Series
Small Sheet Steel Enclosures

Features/Applications:

The STB series of sheet steel enclosures are designed to meet the requirement for distribution and lighting junction boxes.

Available in eight sizes with standard finishes of painted or 316L stainless steel, together with the high IP rating make these enclosures suitable for all environmental conditions.

The stainless steel versions are particularly recommended for use in marine or other corrosive environments. Painting of these enclosure uses a two stage elecrophoretic dip coat system. Treatment includes iron phosphate and paint application followed by electrostatic polyester powder coating. When applied to a mild steel substrate gives a minimum of 500 hours salt spray resistance.

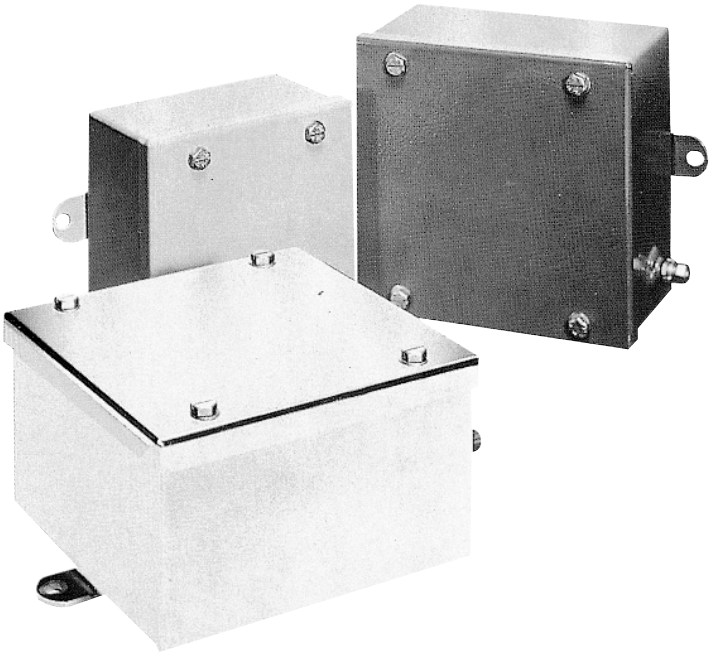

Specifications:

Material		0.059″ Sheet Steel 0.059″ 316L Stainless Steel
Finish		Painted – RAL 7032, Grey Stainless Steel – 'Bright Chemical Dip'
Gasket		HT800 Silicone
Cover Mounting		4 x M6 Slotted, Hexagon Head, Captive Screws
Grounding		M6 Internal/External Ground Stud
Box Mounting	STB 121208-252512 STB 163812-254013	2 x External Lugs with 0.315″ Clearance Holes 4 x External Lugs with 0.315″ Clearance Holes
Equipment Mounting		TAS 20 Rail Welded to Base of Enclosure, to Which Equipment is Mounted by Means of Sliding Mounting Nut and Screw (1 Rail STB 121208-191910, Rails STB 252512-254030)
Ingress Protection		IP66 BSEN 60529
Temperature Range		–85°F to +275°F
Ambient Temperature		T5 –85°F to +131°F T6 –85°F to +104°F
Impact Resistance		7 J(Nm) to EN 50014

Factory Options (Consult Factory):

Finishes Alternative paint colours
Assembly Supplied with terminals, glands, drilled or drilled and tapped entries, breather/drains, and Myers Hubs

Certifications and Compliances:

c UL us LISTED

UL50/C22.2 No. 94-M91 mild steel: Types 3S, 4; stainless steel: Type 4X.

Germanischer Lloyd (GL)
(Excluding STB151208 & STB 191509)

ATEX 1. Component Certificate KEMA99ATEX7895 U

Codes		
Ex	II 2 G	EEx e II
	II 2 D	≥ IP64

ATEX 2. Certificate of Conformity KEMA99ATEX7894 X

Codes		
Ex	II 2 G	EEx e II T6 or T5
	II 2 D	T100°C ≥ IP64
Ex	II 1 G	EEx ia IIC T6 or T5
	II 2 D	T100°C ≥ IP64
Ex	II 2 (1) G	EEx e ia IIC T6 or T5
	II 2 D	T100°C ≥ IP64

 Copyright© 2006 Cooper Crouse-Hinds

6F STB Series Junction Boxes

Sheet or Stainless Steel
Ordering Information

IP66
EEx e II
EEx ia IIC
EEx e ia IIC

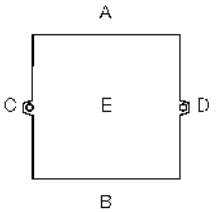

A = Top
B = Bottom
C = Left Hand Side
D = Right Hand Side
E = Base

STB 121208
Height 4.73″
Width 4.72″
Depth 3.15″
Weight 3.09 lb

STB 151208
Height 5.91″
Width 4.72″
Depth 3.15″
Weight 3.50 lb

Ordering Data:

Standard Paint Finish	STBPS121208UL	STBPS151208UL
Stainless Steel Finish	STBS1121208UL	STBS1151208UL

Guide to Gland Entries:

Max. Gland Area Dimensions

Sides	Size	Sides	Size
A, B, C	4.49″ x 2.48″	A, B	4.49″ x 2.48″
D	2.76″ x 2.48″	C	5.67″ x 2.48″
E	2.36″ x 2.36″	D	3.94″ x 2.48″
		E	3.54″ x 2.36″

Gland Sizes (mm) per Side (Reference Only):

		STB 121208				STB 151208			
		Side A	**Side B**	**Side C**	**Side D**	**Side A**	**Side B**	**Side C**	**Side D**
Brass Glands with Locknuts	**16**	5	5	6	4	6	5	7	5
	20	3	2	3	2	3	2	4	3
	25	2	2	2	1	2	2	3	2
	32	1	1	2	1	1	1	2	1
	40	-	-	-	-	-	-	-	-
	50	-	-	-	-	-	-	-	-

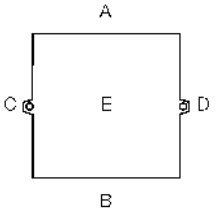

A = Top
B = Bottom
C = Left Hand Side
D = Right Hand Side
E = Base

STB 151509
Height 5.91″
Width 5.91″
Depth 3.54″
Weight 4.19lb

STB 191509
Height 5.91″
Width 7.48″
Depth 3.54″
Weight 5.40 lb

Ordering Data:

Standard Paint Finish	STBPS151509UL	STBPS191509UL
Stainless Steel Finish	STBS1151509UL	STBS1191509UL

Guide to Gland Entries:

Max. Gland Area Dimensions

Sides	Size	Sides	Size
A, B, C	5.67″ x 2.87″	A, B	5.67″ x 2.87″
D	3.94″ x 2.87″	C	7.24″ x 2.87″
E	3.54″ x 3.54″	D	5.12″ x 2.87″
		E	5.12″ x 3.54″

Gland Sizes (mm) per Side (Reference Only):

		STB 151509				STB 191509			
		Side A	**Side B**	**Side C**	**Side D**	**Side A**	**Side B**	**Side C**	**Side D**
Brass Glands with Locknuts	**16**	8	8	8	6	9	8	12	8
	20	5	4	5	3	5	4	7	5
	25	3	3	3	2	3	3	4	3
	32	2	2	2	1	2	2	3	2
	40	1	1	2	1	2	1	2	2
	50	-	-	-	-	-	-	-	-

US: 1-866-764-5454 CAN: 1-800-265-0502 Copyright© 2006 Cooper Crouse-Hinds

STB Series Junction Boxes

Sheet or Stainless Steel Ordering Information

IP66
EEx e II
EEx ia IIC
EEx e ia IIC

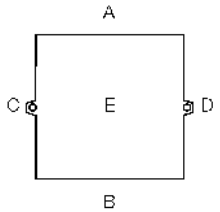

A = Top
B = Bottom
C = Left Hand Side
D = Right Hand Side
E = Base

STB 191910
Height 7.48″
Width 7.48″
Depth 3.94″
Weight 6.61 lb

STB 252512
Height 9.84″
Width 9.84″
Depth 4.73″
Weight 8.16 lb

Ordering Data:

Standard Paint Finish	STBPS191910UL	STBPS252512UL
Stainless Steel Finish	STBS1191910UL	STBS1252512UL

Guide to Gland Entries:

Max. Gland Area Dimensions

Sides	Size	Sides	Size
A, B, C	7.24″ x 3.27″	A, B, C	9.61″ x 4.05″
D	5.51″ x 3.27″	D	7.87″ x 4.05″
E	5.12″ x 5.12″	E	7.48″ x 7.48″

Gland Sizes (mm) per Side (Reference Only):

		STB 191910				STB 252512			
		Side A	**Side B**	**Side C**	**Side D**	**Side A**	**Side B**	**Side C**	**Side D**
Brass Glands with Locknuts	**16**	13	12	14	9	24	23	24	18
	20	8	7	8	6	13	12	13	10
	25	5	4	5	4	10	9	10	8
	32	3	3	3	2	5	5	5	4
	40	2	2	2	2	3	3	3	3
	50	2	1	2	1	3	2	3	2
	63	-	-	-	-	2	2	2	2

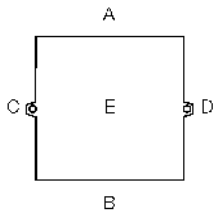

A = Top
B = Bottom
C = Left Hand Side
D = Right Hand Side
E = Base

STB 163812
Height 8.30″
Width 14.96″
Depth 4.72″
Weight 8.14 lb

STB 254013
Height 9.84″
Width 15.74″
Depth 5.12″
Weight 11.88 lb

Ordering Data:

Standard Paint Finish	STBPS163812UL	STBPS254013UL
Stainless Steel Finish	STBS1163812UL	STBS1254413UL

Guide to Gland Entries:

Max. Gland Area Dimensions

Sides	Size	Sides	Size
A, B, C	14.64″ x 4.05″	A, B, C	15.51″ x 4.45″
D	12.99″ x 4.05″	D	13.78″ x 4.45″
E	12.60″ x 3.93″	E	13.39″ x 7.48″

Gland Sizes (mm) per Side (Reference Only):

		STB 163812				STB 254013			
		Side A	**Side B**	**Side C**	**Side D**	**Side A**	**Side B**	**Side C**	**Side D**
Brass Glands with Locknuts	**16**	36	35	15	9	48	47	30	24
	20	21	21	7	5	27	27	17	14
	25	16	15	6	4	16	16	10	8
	32	9	9	3	2	11	11	7	6
	40	6	5	2	1	7	6	4	3
	50	4	4	1	1	5	5	3	2
	63	3	3	1	1	4	3	2	2

 Copyright© 2006 Cooper Crouse-Hinds

STB Series Junction Boxes

Sheet or Stainless Steel Accessories and Dimensions

IP66
EEx e II
EEx ia IIC
EEx e ia IIC

Accessories:

Mounting Hardware
Sliding mounting nuts and screws for mounting assemblies or components to the support rail type TAS 20

	Type	Cat. No.
M5 screw for TS 32/TS 35	SFNS 5	ACCSFNM5
M4 screw for TS15	SFNS 4	ACCSFNM4
M3 screw for terminal strips	SFNS 3	ACCSFNM3

Ground Stud Kits	Type	Cat. No.
	M6 Brass	ACCBSESM6KIT

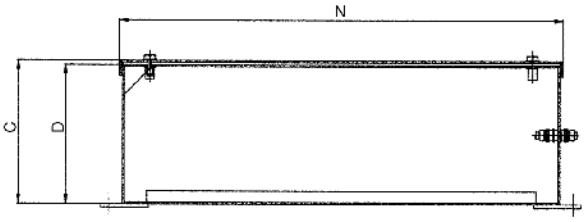

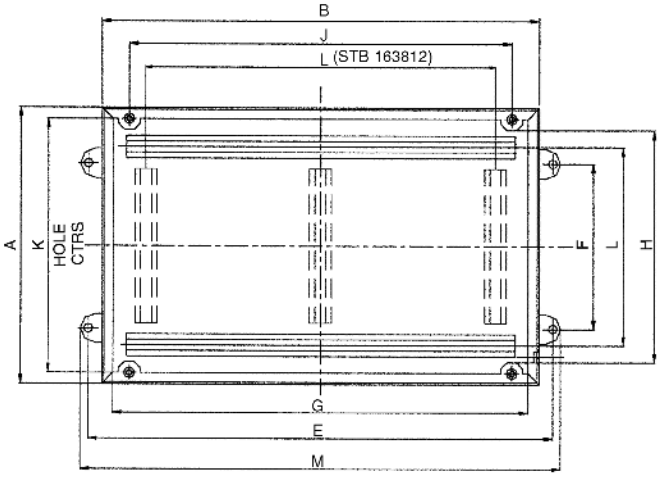

STB Enclosure Series Dimensions (in inches):

Catalog Number	A	B	C	D	E	F	G	H	J	K	L	M	N
STB 121208UL	4.72	4.72	3.15	2.99	5.71	N/A	3.94	3.15	2.76	3.94	N/A	6.26	4.96
STB 151208UL	5.90	4.72	3.15	2.99	5.71	N/A	5.12	3.15	3.94	3.94	N/A	6.26	6.14
STB 151509UL	5.90	5.90	3.54	3.39	6.89	N/A	3.94	5.12	3.94	5.12	N/A	7.44	6.14
STB 191509UL	7.48	5.90	3.54	3.39	6.89	N/A	6.69	4.33	5.12	5.51	N/A	7.44	7.72
STB 191910UL	7.48	7.48	3.94	3.78	8.46	N/A	6.69	5.90	5.51	6.69	N/A	9.02	7.72
STB 252512UL	9.84	9.84	4.72	4.57	10.83	N/A	9.05	8.27	9.05	9.05	7.09	11.38	16.08
STB 163812UL	6.30	14.96	4.72	4.57	15.94	3.15	14.17	4.72	12.99	5.51	11.81	16.50	15.20
STB 254030UL	9.84	15.75	5.12	4.96	16.73	5.90	14.96	8.27	13.78	9.05	7.09	17.28	15.98

US: 1-866-764-5454 CAN: 1-800-265-0502 Copyright© 2006 Cooper Crouse-Hinds

HVB Series Junction Boxes

Sheet or Stainless Steel High Voltage Junction Box

HVB Series High Voltage Junction Boxes

Features & Applications:

The high voltage junction boxes have been designed for the termination of high voltage pumps (''down hole'' pumps).

The HVB's are available in both stainless steel, fully polished or sheet steel with paint finish.

Gland plates are provided top and bottom for cable entry.

The units are complete with 3 or 4 pole assemblies to accept standard cable lugs up to 1.18″ wide and an M12 hole

Live parts are protected by a clear cover, giving protection to IP 2X

High voltage warning labels are fitted to the cover and enclosure cover.

When using the enclosures at their full potential (i.e. 6.6 kV), high voltage cable termination kits have to be used to avoid breakdown of the cable long term.

Specifications:

Material	HVB 463820 HVB 765120, 916120 Gland Plates	0.059″ steel or 316L stainless steel 0.080″ steel or 316L stainless steel 0.128″ steel or 316L stainless steel
Finish		Painted RAL 7032 Stainless Bright Chemical Dip (polished appearance)
Gasket		Neoprene (cover & gland plates)
Cover Mounting		Fully detachable hinged cover with 4 or 6 x M6 hexagon head captive screws
Grounding		M10 internal/external stud M14 internal/external stud for 5.91in² phase conductor only
Box Mounting		4 x external lugs with 0.39″ clearance holes/slots
Ingress Protection		IP66 & IP67 to IEC 529
Temperature Range		–4°F to 104°F (ambient)
Impact Resistance		7 J (Nm)
Gland Plates		Top & Bottom
Ratings	Voltage	6.6 kV 50Hz* ac 3 phase (grounded or ungrounded supply systems) *At frequencies above 50 Hz, current carrying capacities may require derating (e.g. motor variable speed controllers).

Maximium Current Rating (amps):

To allow American Wire Gauge (AWG) cables and current ratings for T6 to T4 temperature classes.

Conductor Size AWG (max. 5.91in²)	Current A T6 (185°F)	T5 (212°F)	T4 (275°F)
6	42	59	65
4	55	80	88
3	64	92	102
2	73	107	118
1	81	121	134
1/0	101	141	156
2/0	150	173	192
3/0	160	180	200

Maximum Wiring Space for HV Cable Termination Kits:

Enclosure Type	Distance Between Bolt & Gland Plate
HVB 463820	7.09″
HVB 765120	13.19″
HVB 916126	16.14″

Connections:

3 or 4 pole, consists of 6 or 8 post insulators with 0.24″ brass busbars, tin lead plated. Cable alignment restrictors prevent misalignment of the conductors. Accepts standard cable lugs up to 1.18″ wide and an M12 hole.

Certifications and Compliances:

EEx'e' II T4 200A, T5 180A, T6 160A to EN 50019.
Certificate of Conformity Ex 91C3217X (enclosure & connection assembly)

UL50/C22.2 No. 94-M91 mild steel: Types 3S, 4; stainless steel: Type 4X

 Copyright© 2006 Cooper Crouse-Hinds

Sheet or Stainless Steel High Voltage Junction Box Ordering Information

HVB463820 (3 pole)

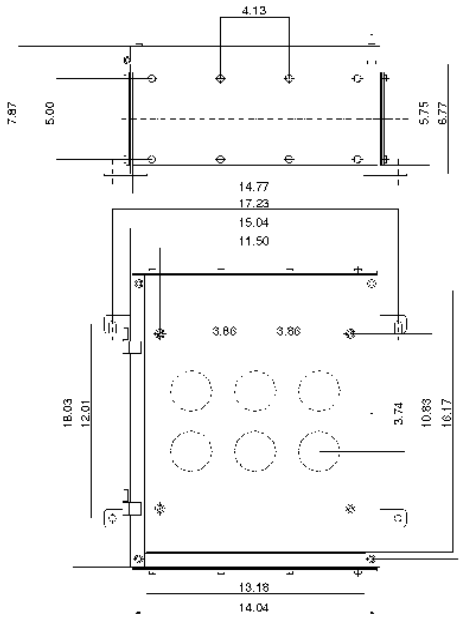

HVB765120 (3 pole)

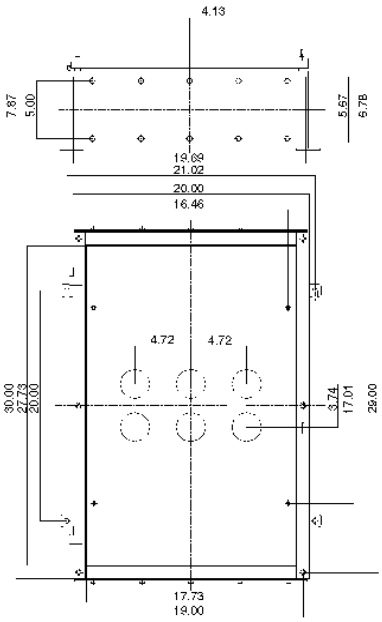

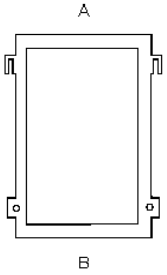

A = Top
B = Bottom

For dimensions marked with a * subtract 1.18″ for 2 gland plate versions

All dimensions in inches.

		Height 18.03″ Width 15.04″ Depth 7.87″ Weight 52.36 lb	Height 30″ Width 20″ Depth 7.87″ Weight 81.57 lb

Ordering Data:

		Cat. No.	Cat. No.
M10 Ground Stud Phase Conductor 4.72in² Max.	Standard Paint Finish	HVBPS463820M10	HVBPS765120M10
	Stainless Steel Finish	HVBS1463820M10	HVBS1765120M10
M14 Ground Stud Phase Conductor 5.91in² Only	Standard Paint Finish	HVBPS463820M14	HVBPS765120M14
	Stainless Steel Finish	HVBS1463820M14	HVBS1765120M14

Guide to Gland Entries:

	Side	Size	Side	Size
Max. Gland Area Dimensions	A + B	13.27″ x 4.25″	A + B	18.27″ x 4.25″

Gland Sizes (mm) Brass (Per Plate):

40	6	8
50	4	6
63	3	4
75	3	4

US: 1-866-764-5454 CAN: 1-800-265-0502 Copyright© 2006 Cooper Crouse-Hinds

Sheet or Stainless Steel High Voltage Junction Box Ordering Information

HVB916120 (3 pole) **HVB916120 (4 pole)**

A = Top
B = Bottom

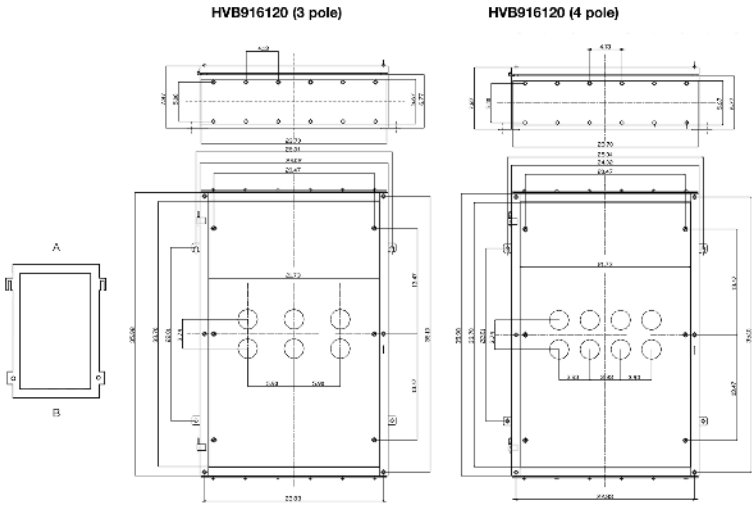

For dimensions marked with a * subtract 1.18″ for 2 gland plate versions

All dimensions in inches.

		Height 35.98″ Width 24.20″ Depth 7.87″ Weight 99.21 lb	Height 35.98″ Width 24.02″ Depth 7.87″ Weight 103.62lb
Ordering Data:			
		Cat. No.	**Cat. No.**
M10 Ground Stud Phase Conductor 4.72in² Max.	Standard Paint Finish	HVBPS916120M10	HVBPS916120M104P
	Stainless Steel Finish	HVBS1916120M10	HVBS1916120M104P
M14 Ground Stud Phase Conductor 5.91in² Only	Standard Paint Finish	HVBPS916120M14	HVBPS916120M144P
	Stainless Steel Finish	HVBS1916120M14	HVBS1916120M144P
Guide to Gland Entries:			
		Side / **Size**	**Side** / **Size**
Max. Gland Area Dimensions		A + B / 22.28″ x 4.25″	A + B / 22.28″ x 4.25″

Gland Sizes (mm) Brass (Per Plate):

40	8	8
50	7	7
63	5	5
75	4	4

 Copyright© 2006 Cooper Crouse-Hinds

QBX Series Junction Boxes

IP65

Sheet or Stainless Steel
Removable Hinge Cover

QBX Series

Features/Applications:

The QBX series of enclosures are available in two types of material and have been developed for the light industrial market.

Stainless steel is recommended to give maximum protection for components in outdoor/aggressive environments.

Specifically designed for the accommodation of rail mounted terminals or other electro/pneumatic components. The QBX series is user friendly and offers good access internally.

- Fully removable hinged cover, concealed hinges provide 180° opening
- Cover mounting, one or two ¼ turn latches (slot shape)
- 10 key lockable variations
- Form-in-place polyurethane gasket
- M6 ground stud in box and cover
- Mounting through internal holes (types 3S and 4) or with external lugs (type 4X)
- Pole mounting kit available

Specifications:

Material	All Types	0.[illegible]" [illegible]el or 304 Stainless Steel
Finish	Flat Electro Polished Finish	Flat [illegible]tro Polished Finish
Gasket	All Types	[illegible]orm-In-Place Polyurethane
Cover Mounting	All Types	2 or 3 Hinges /1 or 2 ¼ Turn Latches
Gland Plates	QBX302012, 303012, 403012, 403022 All Other Sizes	1 Gland Plate Bottom Face 2 Gland Plates on Bottom Face
Grounding	All Types	M6 Studs in Base and Cover
Enclosure Mounting	All Types	Holes Through Back of Enclosure or Using External Mounting Lugs
Equipment Mounting	All Types	IP 65 to BSEN60529
Temperature Range	All Types	–4°F to +176°F

Factory Options (Consult Factory)

Material	Sp[illegible]ial Materials or Thickness According to Customer Specification
Finish	[illegible]cial Colors According to Customer Specification
Sizes	Special Sizes According to Customer Specification
Equipment	Terminals, Myers Hubs, and Glands Assembled According to Customer Specification
Gland Plates	Drilled Cable Glands Fitted to Customer Specification
Ground Studs	Also Available Fitted to Gland Plates
Cover Attachments	e.g. Handles and Locks

Certifi[illegible]ons and Compliances:

c UL us LISTED — UL50/C22.2 No. 94-M91 mild steel: Types 3S, 4; stainless steel: Type 4X

DISCONTINUED

 Copyright© 2006 Cooper Crouse-Hinds

Sheet or Stainless Steel Removable Hinge Cover Ordering Information and Accessories

QBX Series Ordering Information

Painted Sheet Steel RAL 7032
Depth 4.72″

	Cat. No.	Weight (lb)
11.81″ × 7.87″	QBXPS302012UL	6.13
11.81″ × 11.81″	QBXPS303012UL	7.96
15.75″ × 11.81″	QBXPS403012UL	10.74
15.75″ × 15.75″	QBXPS404012UL	13.14
19.68″ × 15.75″	QBXPS504012UL	14.15
23.62″ × 15.75″	QBXPS604012UL	16.33

Stainless Steel (304) Brushed
Depth 4.72″

	Cat. No.	Weight (lb)
11.81″ × 7.87″	QBXS2302012UL	6.48
11.81″ × 11.81″	QBXS2303012UL	8.43
15.75″ × 11.81″	QBXS2403012UL	10.74
15.75″ × 15.75″	QBXS2404012UL	12.34
19.68″ × 15.75″	QBXS2504012UL	14.98
23.62″ × 15.75″	QBXS2604012UL	18.43

Painted Sheet Steel RAL 7032
Depth 8.66″

	Cat. No.	Weight (lb)
11.81″ × 11.18″	QBXPS303022UL	11.35
11.81″ × 15.75″	QBXPS304022UL	13.73
15.75″ × 11.81″	QBXPS403022UL	13.73
15.75″ × 15.75″	QBXPS404022UL	16.42
15.75″ × 19.68″	QBXPS405022UL	19.11
19.68″ × 15.75″	QBXPS504022UL	19.11
19.68″ × 19.68″	QBXPS505022UL	22.13
19.68″ × 23.62″	QBXPS506022UL	25.15
23.62″ × 15.75″	QBXPS604022UL	21.62
23.62″ × 19.68″	QBXPS605022UL	25.15
23.62″ × 23.62″	QBXPS606022UL	28.66
27.56″ × 19.68″	QBXPS705022UL	28.17
27.56″ × 23.62″	QBXPS706022UL	31.81
31.50″ × 23.62″	QBXPS806022UL	34.50

Stainless Steel (304) Brushed
Depth 8.66″

	Cat. No.	Weight (lb)
11.81″ × 11.81″	QBXS2303022UL	11.40
11.81″ × 15.75″	QBXS2304022UL	13.78
15.75″ × 11.81″	QBXS2403022UL	13.78
15.75″ × 15.75″	QBXS2404022UL	16.49
15.75″ × 19.68″	QBXS2405022UL	19.19
19.68″ × 15.75″	QBXS2504022UL	19.19
19.68″ × 19.68″	QBXS2505022UL	22.22
19.68″ × 23.62″	QBXS2506022UL	25.25
23.62″ × 15.75″	QBXS2604022UL	22.26
23.62″ × 19.68″	QBXS2605022UL	25.25
23.62″ × 23.62″	QBXS2606022UL	29.98
27.56″ × 19.68″	QBXS2705022UL	28.28
27.56″ × 23.62″	QBXS2706022UL	31.95
31.50″ × 23.62″	QBXS2806022UL	34.75

All enclosures are supplied with zinc coated mounting plate

DISCONTINUED

Accessories:

Stand-Off Pillars M6:

Type	Cat. No.	Length Inches
SP15 (Set of 2)	ACCSOP15	0.59″
SP20 (Set of 2)	ACCSOP20	0.79″
SP30 (Set of 2)	ACCSOP30	1.18″

Mounting Feet:

Type	Cat. No.	
QMF (Set of 4)	QBXPSMF	For All Types (Steel)
QSF (Set of 4)	QBXS1MF	For All Types (Stainless Steel)

Rail Mounting Bracket:

Type		Cat. No.
QZF	QBXRMB	For All Types

Further Accessories:

Type	Cat. No.
Ground Cable	QBXEARTHCAB
Grounding Accessory Kit	QBXEARTHKIT

	Lock Inserts (Key Not Included Unless Stated)	Keys
Type	Cat. No.	Cat. No.
Slot Shape	QBXLKSLOT	N/A
Eastern European (D Shape)	QBXLKEE	QBXKEYEE
Double Bit Shape	QBXLKDBS	QBXKEYDBS
Square 8mm	QBXLKSQ8	QBXKEYSQ8
Square 7mm	QBXLKSQ7	QBXKEYSQ7
Triangular 8mm	QBXLKTR8	QBXKEYTR8
Triangular 7mm	QBXLKTR7	QBXKEYTR7
Crown Shape	QBXLKCWN	QBXKEYCWN
Wing Knob Insert with Standard Key	QBXLKWKI	QBXKEYWNI
L Padlockable Handle 10mm	QBXLKPAD	N/A

 Copyright© 2006 Cooper Crouse-Hinds

QBX Series Junction Boxes

IP65

Sheet or Stainless Steel Removable Hinge Cover Dimensions

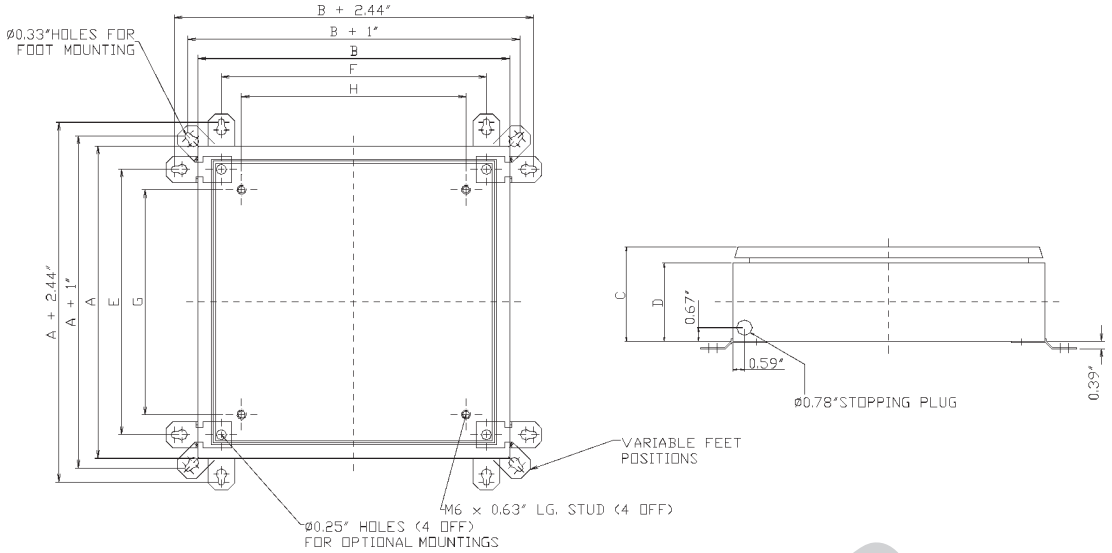

QBX Enclosure Series Dimensions (in inches):

Enclosure Type 4.72" Depth	A Length	B Width	C Height	D	E	F	G	H
QBX302012	11.81	7.87	4.72	9.34	9.45	5.51	7.40	3.46
QBX303012	11.81	11.81	4.72	9.34	9.45	9.45	7.40	7.40
QBX403012	15.75	11.81	4.72	9.34	13.39	9.45	11.34	7.40
QBX404012	15.75	15.75	4.72	9.[illegible]	13.39	13.39	11.34	11.34
QBX504012	19.68	15.75	4.72	[illegible]	17.32	13.39	15.28	11.34
QBX604012	23.62	15.75	4.72	[illegible]34	21.26	13.39	19.21	11.34

Enclosure Type 8.66" Depth	A Length	B Width	C Height	D	E	F	G	H
QBX303022	11.81	11.81	8.66	7.87	9.45	9.45	7.40	7.40
QBX304022	11.81	15.[illegible]	8.66	7.87	9.45	13.39	7.40	11.34
QBX403022	15.75	11.81	8.66	7.87	13.39	9.45	11.34	7.40
QBX404022	15.75	15.75	8.66	7.87	13.39	13.39	11.34	11.34
QBX405022	15.75	19.68	8.66	7.87	13.39	17.32	11.34	15.28
QBX504022	19.68	15.75	8.66	7.87	17.32	13.39	15.28	11.34
QBX505022	19.68	19.68	8.66	7.87	17.32	17.32	15.28	15.28
QBX506022	19.68	23.62	8.66	7.87	17.32	21.26	15.28	19.21
QBX604022	23.62	15.75	8.66	7.87	21.26	13.39	19.21	11.34
QBX605022	23.62	19.68	8.66	7.87	21.26	17.32	19.21	15.28
QBX606022	23.62	23.62	8.66	7.87	21.26	21.26	19.21	19.21
QBX705022	27.56	19.68	8.66	7.87	25.20	17.32	23.15	15.28
QBX706022	27.56	23.62	8.66	7.87	25.20	21.26	23.15	19.21
QBX806[illegible]	31.49	23.62	8.66	7.87	29.15	21.26	27.08	19.21

DISCONTINUED

Enclosure side identification

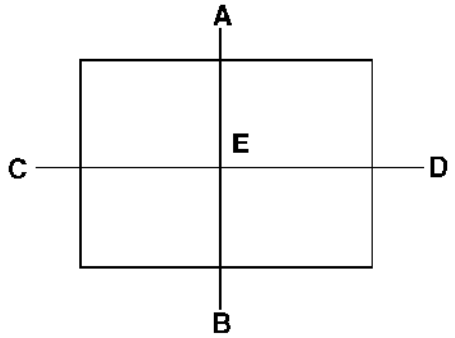

A: Top
B: Bottom
C: Left
D: Right
E: Back

US: 1-866-764-5454 CAN: 1-800-265-0502 Copyright© 2006 Cooper Crouse-Hinds

Explosion Protected Terminal Boxes

Series GHG 744, 745, 746, 749

UL/cUL Listed
Class I, Division 2, Groups A, B, C, D
Class I, Zones 1 and 2, AEx de IIB + H_2, T6
Class II, Division 1, Groups E, F, G (cUL)
CENELEC - PTB ATEX CERTIFIED
EEx de IIC, T6, Zones 1 and 2
EEx de IIC, T6 Zones 21 and 22
IP66, NEMA 4X

Application:

Explosion protected terminal boxes are used in a metallic conduit or cable system for a marshalling cabinet between main circuits to the control room and branch circuits into the field.

- Junction boxes for intrinsically safe or increased safety connections
- Are designed for industrial areas such as chemical plants, oil and gas refineries, paint and varnish manufacturing plants, gasoline bulk loading terminals and finishing areas where nonmetallic, weatherproof enclosures

Features:

- Enclosures can be mounted on walls, conduits or strut systems
- Connection terminals accessible from all sides
- Snap-out brass plates for metallic entry and grounding continuity
- Snap-out terminal rails
- Clip-in grounding PE rail
- Different sizes to accommodate any number of terminal connections

Standard Materials:

- Fiberglass - reinforced polyester housings
- Enclosure gasket - silicone
- Cover screws - stainless steel
- Metal entry plates - brass
- Conduit entries - zinc Myers hubs

Technical Data:

- Suitable from 1 to 296 terminal blocks (2.5mm²)
- Suitable for up to 90 - ¾″ hubs (largest size)
- Suitable for up to 72 - ¾″ metallic hubs
- Suitable for use as control panels
- Ex-e boxes and brass flanges can be field drilled

Ordering Data:

Contact factory for catalog numbers and pricing. Call 315 477-5531

Have the following information ready -

- Number and size of terminals (Table 1)
- Number, size and location of entries (Tables 2 & 3)
- Required ground points (Table 4)

Cooper Crouse-Hinds will provide you with an extended list

Certifications & Compliances:

- UL/cUL Listed
- Class I, Division 2, Groups A, B, C, D
- Class I, Zones 1 and 2, (A)Ex de IIB+H_2, T6
- Class II, Division 1, Groups E, F, G (cUL)
- CENELEC - PTB ATEX CERTIFIED
- EEx de IIC, T6, Zones 1 and 2
- EEx de IIC, T6, Zones 21 and 22
- IP 66, NEMA 4X

Dimensions:

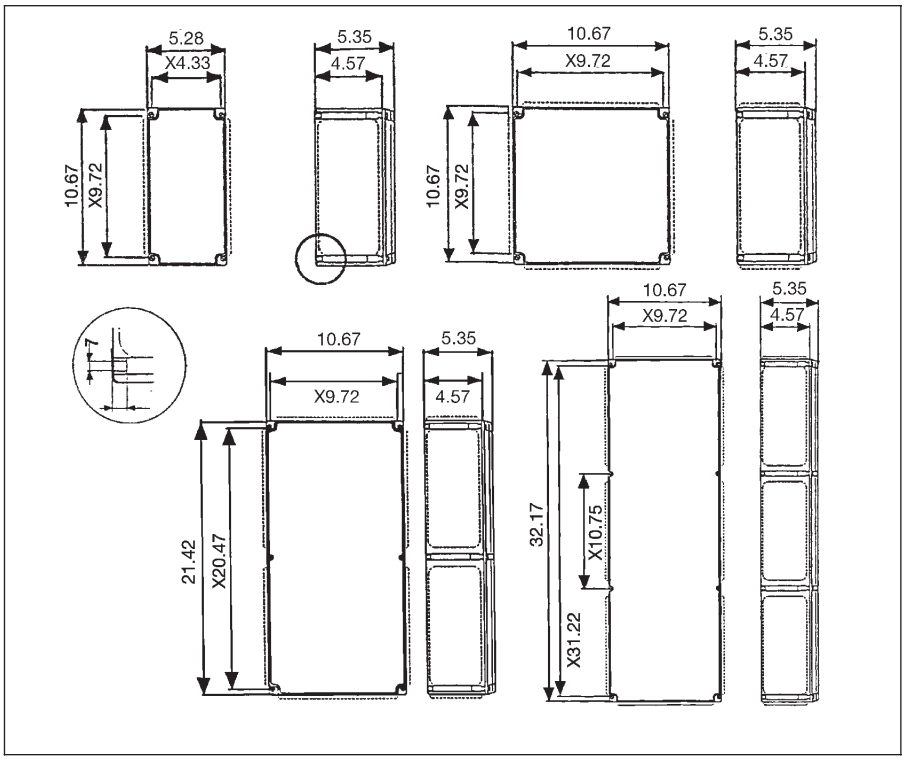

 Copyright© 2006 Cooper Crouse-Hinds

Explosion Protected Terminal Boxes

Series GHG 744, 745, 746, 749

UL/cUL Listed
Class I, Division 2, Groups A, B, C, D
Class I, Zones 1 and 2, AEx de IIB + H_2, T6
Class II, Division 1, Groups E, F, G (cUL)
CENELEC - PTB ATEX CERTIFIED

EEx de IIC, T6, Zones 1 and 2
EEx de IIC, T6 Zones 21 and 22
IP66, NEMA 4X

Panel and Side Designation

The sides of the enclosures are designated as W, X, Y & Z alphabetically in a clockwise rotation.
The narrow sides are always W & Y and the long sides are X & Z

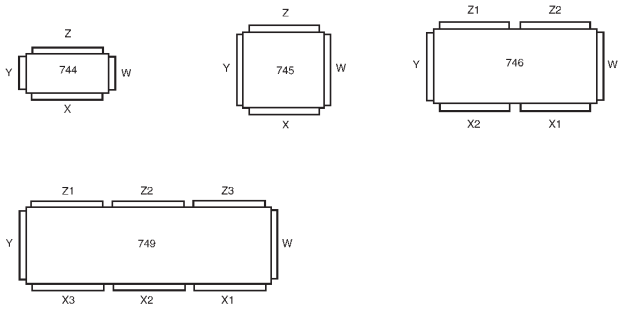

Table 1
Maximum number of built-in terminals supplied with enclosure

	Terminal cross section in mm²							
Type	**2.5**	**4**	**6**	**10**	**16**	**25**	**35**	**Length of terminal rail**
GHG 44	**40**	**33**	**25**	**20**	**17**	**17**	**–**	**(1) 230 mm**
GHG 45	**(2) 41**	**(2) 34**	**(2) 26**	**(2) 20**	**17**	**17**	**14**	**(2) 235 mm**
GHG 46	**(2) 94**	**(2) 78**	**(2) 26**	**(2) 20**	**40**	**40**	**32**	**(2) 510 mm**
GHG 49	**(2) 148**	**(2) 124**	**(2) 94**	**(2) 75**	**63**	**63**	**51**	**(2) 795 mm**

Table 2
Flange Arrangement for Each Enclosure

Enclosure	744	745	746	749
Removable Flanges	**2 total 1 - top & bottom**	**4 total 1 per side**	**6 total 2 top & bottom 1 each side**	**8 total 3 top and bottom 1 each side**
Covers *	**Shallow**	**Deep or shallow**	**Deep or shallow**	**Shallow**
# of DIN rails	**1**	**1 or 2**	**1, 2, or 4**	**1, 2, or 6**

* The shallow cover is standard for terminal boxes. The deep cover is used when mounting larger sized terminal (>95 mm²) or switches for 80 amps and larger.

Table 3
Maximum number of Glands per Side

Type	Side	M12	M16	M20	M25	M32	M40	M50	M63
NPT equivalent				**½″**	**¾″**	**1″**	**1¼″**	**1½″**	**2″**
GHG 744	**X/Z**	**60**	**36**	**26**	**18**	**10**	**7**	**4**	**3**
GHG 745	**X/Z**	**60**	**36**	**26**	**18**	**10**	**7**	**4**	**3**
GHG 746	**X/Z**	**120**	**72**	**52**	**36**	**20**	**14**	**8**	**6**
GHG 749	**X/Z**	**180**	**108**	**78**	**54**	**30**	**21**	**12**	**9**
# of glands /flange*		**46**	**25**	**20**	**11**	**8**	**4**	**3**	**2**
# of Myers hubs /flange*			**–**	**10**	**9**	**6**	**3**	**3**	**2**

If flanges are used, fewer glands can be installed. See Table 1 for flange arrangement.
Example: In the GHG 745 box a maximum of (10) ½″ Myers hubs can be installed on each brass flange plates. Each side will take one brass flange for a total of (40) ½″ Myers hubs.

US: 1-866-764-5454 CAN: 1-800-265-0502 Copyright© 2006 Cooper Crouse-Hinds

Ground Rails:

- Used to connect ground points to common ground
- PE "potential earth" - European designation
- Designated by 3 number ordering code (see Table 4)

Table 4
Explanation of 14 × 2 × 4 mm²

Number	Meaning	Example
1st	Number of screw terminals	14 screw terminals on strip
2nd	# wires that can be connected on each terminal	2 ground wires can be connected
3rd	Maximum conductor diameter	4 mm² conductors can be terminated on the ground rail (28 total, 14 terminals; 2 wires per terminal)

Use Table 5 as a conversion from AWG to mm²

Table 5
Equivalent of AWG Conductor to mm²

AWG	Area mm²
14	2.08
12	3.31
10	5.26
8	8.37
6	13.3
4	21.15
3	26.66
2	33.63
1	42.41
1/0	53.51
2/0	67.44
3/0	85.03
4/0	107.22

 Copyright© 2006 Cooper Crouse-Hinds